ENGINE and GEARBOX

www.ClassicCycles.org

Bantam

Plate Ref. Number.	Models.	Part No.	Description.	Number per set.
1	Bantam	21–4	Cylinder barrel stud nut	4
2	Bantam	2–923	Cylinder barrel stud washer	4
3	Bantam	90–2	Cylinder head	1
4	Bantam	66–102	Sparking plug washer	1
5	Bantam	65–112	Sparking plug	1
6	Bantam	90–85	Gudgeon pin circlip	2
7	Bantam	90–84	Gudgeon pin	1
8	Bantam	90–136	Piston only with pegs (Standard)	1
	Bantam	90–276	Piston only with pegs (1st oversize)	1
	Bantam	90–435	Piston only with pegs (2nd oversize)	1
9	Bantam	90–9	Compression ring	2
	Bantam	90–278	Compression ring (1st oversize)	2
	Bantam	90–394	Compression ring (2nd oversize)	2
10	Bantam	90–123	Piston ring peg	2
11	Bantam	90–162	Crankcase with fixed fittings (offside)	1
12	Bantam	90–111	Cylinder barrel stud	4
13	Bantam	2–2894	Dipstick washer (fibre)	1
14	Bantam	90–112	Dipstick	1
15	Bantam	90–117	Primary chain cover gasket	1
16	Bantam	90–139	Primary chain cover complete	1
17	Bantam	90–124	Primary chain cover screw (long)	2
18	Bantam	90–262	Primary chain cover and drain plug washer (fibre)	7
19	Bantam	89–3208	Gearchange lever rubber	1
20	Bantam	90–268	Gearchange lever	1
21	Bantam	90–135	Kickstart pedal rubber	1
22	Bantam	90–91	Kickstart pedal	1
23	Bantam	21–62	Gearchange lever bolt	1
	Bantam	21–62	Kickstart pedal bolt	1
24	Bantam	2–2580	Gearchange lever bolt washer	1
	Bantam	2–2580	Kickstart pedal bolt washer	1
25	Bantam	21–29	Gearchange lever bolt nut	1
	Bantam	21–29	Kickstart pedal bolt nut	1
26	Bantam	90–125	Primary chain cover screw (short)	1
27	Bantam	65–3062	Primary chain cover screw	2
28	Bantam	90–10	Crankshaft bearing	1
29	Bantam	90–108	Crankcase dowel bush	2
30	Bantam	90–75	Mainshaft bearing circlip	1
31	Bantam	90–11	Mainshaft bearing	1
32	Bantam	90–368	Clutch cover screw	3
33	Bantam	29–3319	Clutch cover screw washer (shakeproof)	3
34	Bantam	90–336	Clutch cover	1
35	Bantam	90–27	Clutch casing snap ring	1
36	Bantam	90–341	Clutch spring cup plate	1
37	Bantam	90–83	Layshaft bush	1
38	Bantam	90–82	Layshaft gear (32T)	1
	Bantam	90–448	Layshaft gear (28T) (close ratio) (as required)	1
39	Bantam	90–81	Layshaft gear (25T)	1
	Bantam	90–449	Layshaft sliding gear (25T) (close ratio) (as required)	1
	Bantam	90–457	Layshaft sliding gear (26T) (wide ratio) (as required)	1
40	Bantam	90–351	Layshaft with gear (19T)	1
	Bantam	90–476	Layshaft with gear (23T) (close ratio) (as required)	1
41	Bantam	90–353	Layshaft gear only (19T)	1
	Bantam	90–447	Layshaft gear (23T) (close ratio) (as required)	1
42	Bantam	90–50	Gear selector fork shaft	1
43	Bantam	90–51	Gear selector fork spring ring	1
44	Bantam	90–54	Gear selector fork spring cup	1
45	Bantam	90–53	Gear selector fork spring	1
46	Bantam	90–88	Kickstart quadrant spindle	1
47	Bantam	90–179	Kickstart quadrant	1
48	Bantam	90–89	Kickstart quadrant spring	1
49	Bantam	90–90	Kickstart quadrant spring plate	1
50	Bantam	90–58	Gear selector arm swivel pin (not sold separately)	1
	Bantam	90–56	Gear selector arm bracket complete	1
51	Bantam	90–57	Gear selector arm bracket (not sold separately)	1
52	Bantam	90–173	Gear selector arm	1
53	Bantam	90–63	Gear selector arm bracket lockwasher	2
54	Bantam	90–62	Gear selector arm bracket screw	2
55	Bantam	90–94	Gear indicator lever spindle	1
56	Bantam	1–6008	Gear indicator lever bolt	1
57	Bantam	90–93	Gear indicator lever	1

ENGINE and GEARBOX

Bantam

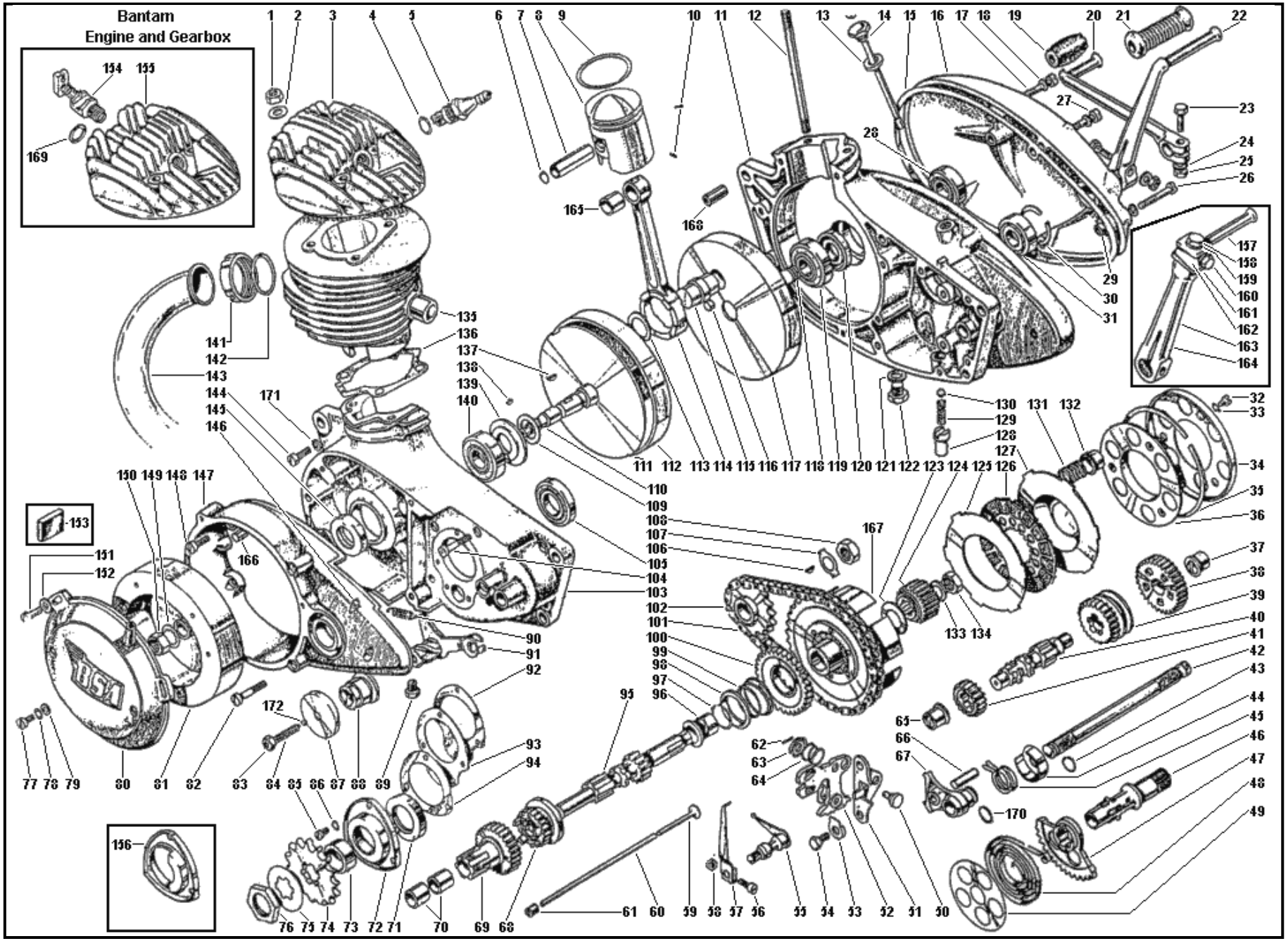

www.ClassicCycles.org

Plate Ref. Number.	Models.	Part No.	Description.	Number per set.
58	Bantam	1-4616	Gear indicator lever bolt nut	1
59	Bantam	90-98	Clutch push rod (short)	1
60	Bantam	90-99	Clutch push rod (long)	1
61	Bantam	90-132	Clutch push bush (rubber)	1
62	Bantam	90-61	Gear selector swivel pin peg	1
63	Bantam	90-60	Gear selector arm spring cup	1
64	Bantam	90-59	Gear selector arm retaining spring	1
65	Bantam	90-83	Layshaft bush	1
66	Bantam	90-52	Gear selector fork peg (not sold separately)	1
	Bantam	90-190	Gear selector fork and peg	1
67	Bantam	90-49	Gear selector fork (not sold separately)	1
68	Bantam	90-74	Mainshaft gear (22T)	1
	Bantam	90-458	Mainshaft sliding gear (21T) (wide ratio) (as required)	1
69	Bantam	90-65	Mainshaft primary gear (28T)	1
	Bantam	90-474	Primary drive gear (close ratio) (as required) (24T)	1
70	Bantam	90-67	Mainshaft primary gear bush	2
71	Bantam	89-3006	Mainshaft oil seal	1
72	Bantam	90-72	Mainshaft oil seal housing	1
73	Bantam	90-71	Gearbox sprocket distance sleeve	1
74	Bantam	90-68	Gearbox sprocket (15T) (Standard)	1
	Bantam	90-473	Gearbox sprocket (16T) (Competition only)	1
	Bantam	90-299	Gearbox sprocket (14T) (Competition only)	1
75	Bantam	90-70	Gearbox sprocket lockwasher	1
76	Bantam	90-172	Gearbox sprocket nut	1
77	Bantam	90-256	Flywheel magneto cam screw (Wico Pacy)	1
78	Bantam	90-258	Flywheel magneto cam screw washer (Wico Pacy)	1
79	Bantam	90-257	Flywheel magneto cam screw washer (Wico Pacy)	1
80	Bantam	90-444	Flywheel and generator complete (Wico Pacy)	1
81	Bantam	11B-55AAA	Generator flywheel only (Wico Pacy)	1
	Bantam	90-295	Generator fixing stud (Lucas generator)	4
	Bantam	90-296	Generator (Lucas)	1
	Bantam	21-29	Generator fixing stud nut (Lucas)	2
	Bantam	90-346	Generator fixing stud washer (Lucas)	4
	Bantam	90-297	Generator extracting screw (Lucas)	1
	Bantam	90-298	Rotor fixing screw (Lucas)	1
	Bantam	90-118	Generator inspection cover (Lucas)	1
	Bantam	1-4606	Generator inspection cover screw (Lucas)	2
82	Bantam	90-125	Crankcase fixing screw (long)	2
83	Bantam	89-366	Clutch adjusting screw locknut	1
84	Bantam	90-105	Clutch adjusting screw	1
85	Bantam	2-498	Mainshaft oil seal housing screw	5
86	Bantam	29-3319	Mainshaft oil seal housing washer (shakeproof)	5
87	Bantam	90-106	Clutch operating lever cap	1
88	Bantam	90-184	Clutch operating lever bush	1
89	Bantam	90-261	Crankcase drain plug	1
90	Bantam	90-122	Clutch operating lever spring	1
91	Bantam	90-180	Clutch operating lever complete	1
92	Bantam	90-272	Mainshaft thrust plate gasket	1
93	Bantam	90-133	Mainshaft bearing thrust plate	1
94	Bantam	90-73	Mainshaft oil seal housing gasket	1
95	Bantam	90-64	Gearbox mainshaft	1
	Bantam	90-445	Gearbox mainshaft (close ratio) (as required)	1
96	Bantam	90-76	Chain chainwheel distance bush	1
97	Bantam	90-24	Chain chainwheel circlip	1
98	Bantam	90-40	Kickstart pinion spring retainer	1
99	Bantam	90-39	Kickstart pinion spring	1
100	Bantam	90-177	Kickstart pinion	1
101	Bantam	90-134	Primary chain	1
102	Bantam	90-120	Crankshaft sprocket (17T)	1
103	Bantam	90-163	Crankcase with fixed fittings (nearside) (Wico Pacy generator)	1
	Bantam	90-164	Crankcase with fixed fittings (nearside) (Lucas generator)	1
104	Bantam	90-125	Crankcase fixing screw (long)	2
105	Bantam	90-12	Gearbox sleeve pinion bearing	1
106	Bantam	35-1896	Crankshaft sprocket key	1
107	Bantam	90-121	Crankshaft sprocket lockwasher	1
108	Bantam	90-340	Crankshaft nut	1
109	Bantam	90-152	Crankshaft shim (.003") (as required)	—
	Bantam	90-153	Crankshaft shim (.004") (as required)	—
	Bantam	90-154	Crankshaft shim (.005") (as required)	—
	Bantam	90-155	Crankshaft shim (.010") (as required)	—

Bantam

Plate Ref. Number.	Models.	Part No.	Description.	Number per set.
110	Bantam	90-506	Flywheel spindle (nearside) (fitted on and after Engine No. BD2/101) (not sold separately)	1
	Bantam	90-605	Flywheel spindle (nearside) (fitted on and after Engine No. BD2L/101) (not sold separately)	1
111	Bantam	90-171	Flywheel cover plate	1
112	Bantam	90-596	Flywheel with spindle (nearside) (fitted on and after Engine No. BD2/101) (Wico Pacy)	1
	Bantam	90-603	Flywheel with spindle (nearside) (fitted on and after Engine No. BD2L/101) (Lucas)	1
113	Bantam	90-499	Big end thrust washer (fitted on and after Engine Nos. BD2/101 and BD2L/101)	2
	Bantam	90-601	Connecting rod with crankpin, rollers and gudgeon pin bush	1
114	Bantam	90-497	Connecting rod only (fitted on and after Engine Nos. BD2/101 and BD2L/101) (not sold separately)	1
115	Bantam	90-498	Crankpin (fitted on and after Engine Nos. BD2/101 and BD2L/101) (not sold separately)	1
116	Bantam	90-594	Big end roller (fitted on and after Engine Nos. BD2/101 and BD2L/101) (not sold separately)	14
117	Bantam	90-597	Flywheel complete (offside) (fitted on and after Engine No. BD2/101) (Wico Pacy)	1
	Bantam	90-604	Flywheel complete (offside) (fitted on and after Engine No. BD2L/101) (Lucas)	1
118	Bantam	90-505	Flywheel spindle (offside) (fitted on and after Engine Nos. BD2/101 and BD2L/101) (not sold separately)	1
119	Bantam	89-3023	Crankshaft bearing	1
120	Bantam	90-284	Crankshaft oil seal	1
121	Bantam	2-2894	Drain plug washer (fibre)	1
122	Bantam	90-115	Drain plug	1
123	Bantam	90-283	Clutch chainwheel thrust washer	1
124	Bantam	90-28	Clutch hub	1
125	Bantam	90-37	Clutch driven plate	2
126	Bantam	90-34	Clutch driving plate complete	3
127	Bantam	90-32	Clutch actuating plate	2
128	Bantam	90-47	Gear selector arm spring socket	1
129	Bantam	90-46	Gear selector arm spring	1
130	Bantam	90-241	Gear selector arm ball	1
131	Bantam	90-29	Clutch spring	6
132	Bantam	90-30	Clutch spring cup	6
133	Bantam	15-39	Mainshaft washer	1
134	Bantam	90-340	Mainshaft nut	1
135	Bantam	90-1	Cylinder barrel	1
136	Bantam	90-273	Cylinder base gasket	1
137	Bantam	89-149	Flywheel magneto key	1
138	Bantam	90-246	Flywheel magneto cam key	1
	Bantam	90-294	Flywheel spindle peg (Lucas generator)	1
139	Bantam	90-243	Crankshaft distance collar	1
140	Bantam	89-3023	Crankshaft bearing	1
141	Bantam	90-265	Exhaust pipe union nut	1
142	Bantam	90-3002	Exhaust pipe union nut washer	1
143	Bantam	90-3024	Exhaust pipe (Standard rigid and spring frame)	1
	Bantam	90-3033	Exhaust pipe (Competition rigid and spring frame)	1
144	Bantam	65-2158	Crankcase screw	9
145	Bantam	90-147	Crankcase oil seal	1
	Bantam	90-284	Crankcase oil seal (Lucas generator)	1
146	Bantam	28-2080	Crankcase cover grease nipple (nearside)	1
	Bantam	15-5290	Crankcase cover grease nipple (offside) (Lucas)	1
147	Bantam	90-183	Crankcase cover with fixed fittings (nearside) (Wico Pacy)	1
	Bantam	90-162	Crankcase cover with fixed fittings (offside) (Lucas)	1
148	Bantam	90-248	Crankcase cover fixing screw (short)	2
149	Bantam	90-260	Flywheel magneto fixing nut washer	1
150	Bantam	90-259	Flywheel magneto fixing nut	1
151	Bantam	65-2158	Flywheel magneto fixing screw	3
152	Bantam	2-2580	Flywheel magneto fixing screw washer	3
153	Bantam	90-285	Crankcase generator seal	1
154	Bantam	33-1118	Release valve	1
155	Bantam	90-287	Cylinder head (Competition)	1
156	Bantam	90-450	Mainshaft oil seal housing (use only with 90-299 14T rear chain sprocket)	1
157	Bantam	65-3427	Kickstart crank pedal (Competition)	1
158	Bantam	29-5156	Kickstart pedal bolt (Competition)	1
159	Bantam	66-4707	Kickstart pedal bolt washer (Competition)	1

ENGINE and GEARBOX

www.ClassicCycles.org

Bantam

Plate Ref. Number.	Models.	Part No.	Description.	Number per set.
160	Bantam	2-220	Kickstart crank spring bolt	1
161	Bantam	29-541	Kickstart crank spring bolt washer	1
162	Bantam	65-3428	Kickstart crank pedal spring	1
163	Bantam	90-348	Kickstart crank only	1
164	Bantam	90-347	Kickstart crank complete	1
165	Bantam	90-130	Connecting rod gudgeon pin bush	1
166	Bantam	90-110	Crankcase dowel	2
167	Bantam	90-175	Clutch chainwheel complete	1
168	Bantam	90-109	Dowel bush	2
169	Bantam	66-102	Exhaust lifter washer (Competition)	1
170	Bantam	90-55	Gearchange selector fork circlip	1
171	Bantam	90-346	Crankcase screw washer	11
172	Bantam	89-5015	Clutch push rod ball	1

Plate 2

FRAME and FITTINGS

Bantam Standard and Competition (Rigid Frame).

Plate Ref. Number.	Models.	Part No.	Description.	Number per set.
1	Standard (rigid)	90-4805	Footrest rubber	2
	Competition (rigid)	29-7551	Footrest rubber	2
2	Standard (rigid)	21-5106	Footrest rod nut	2
	Competition (rigid)	21-5105	Footrest rod nut	2
3	Standard (rigid)	3-107	Footrest rod spring washer	2
	Competition (rigid)	3-110	Footrest rod spring washer	2
4	Standard (rigid)	24-5914	Footrest rod locating washer (outside)	2
5	Standard (rigid)	90-4806	Footrest rod distance tube	2
6	Standard (rigid)	2-108	Footrest rod locating washer (inside)	2
7	Standard (rigid)	90-4719	Central stand sleeve (offside)	1
	Competition (rigid)			
8	Standard (rigid)	90-7008	Rear brake pedal return spring	1
	Competition (rigid)			
9	Standard (rigid)	21-5102	Engine mounting bolt (bottom) nut	2
	Competition (rigid)			
10	Standard (rigid)	2-1462	Engine mounting bolt (bottom) washer (spring)	2
	Competition (rigid)			
11	Standard (rigid)	2-1374	Engine mounting bolt (bottom) washer (plain)	4
	Competition (rigid)			
12	Standard (rigid)	21-5103	Engine mounting bolt (top) nut	2
	Competition (rigid)			
13	Standard (rigid)	24-8784	Engine mounting bolt (top) washer (spring)	2
	Competition (rigid)			
14	Standard (rigid)	2-923	Engine mounting bolt (top) washer (plain)	4
	Competition (rigid)			
15	Standard (rigid)	65-5319	Steering head ballrace cone	2
	Competition (rigid)			
16	Standard (rigid)	$^{3}/_{16}$"	Steering head ball (steel)	48
	Competition (rigid)			
17	Standard (rigid)	65-4465	Ball head cup	2
	Competition (rigid)			
18	Standard (rigid)	28-2080	Ball head grease nipple	1
	Competition (rigid)			
19	Standard (rigid)	65-5321	Steering head dust cap	1
	Competition (rigid)			
20	Standard (rigid)	90-4001	Frame complete with fixed fittings	1
	Competition (rigid)			
21	Standard (rigid)	21-5670	Engine mounting bolt (top)	2
	Competition (rigid)			
22	Standard (rigid)	21-5620	Engine mounting bolt (bottom)	2
	Competition (rigid)			
23	Standard (rigid)	90-7001	Rear brake pedal complete	1
	Competition (rigid)	90-7010	Rear brake pedal complete	1

Plate 2.

FRAME and FITTINGS

Bantam Standard and Competition (Rigid Frame).

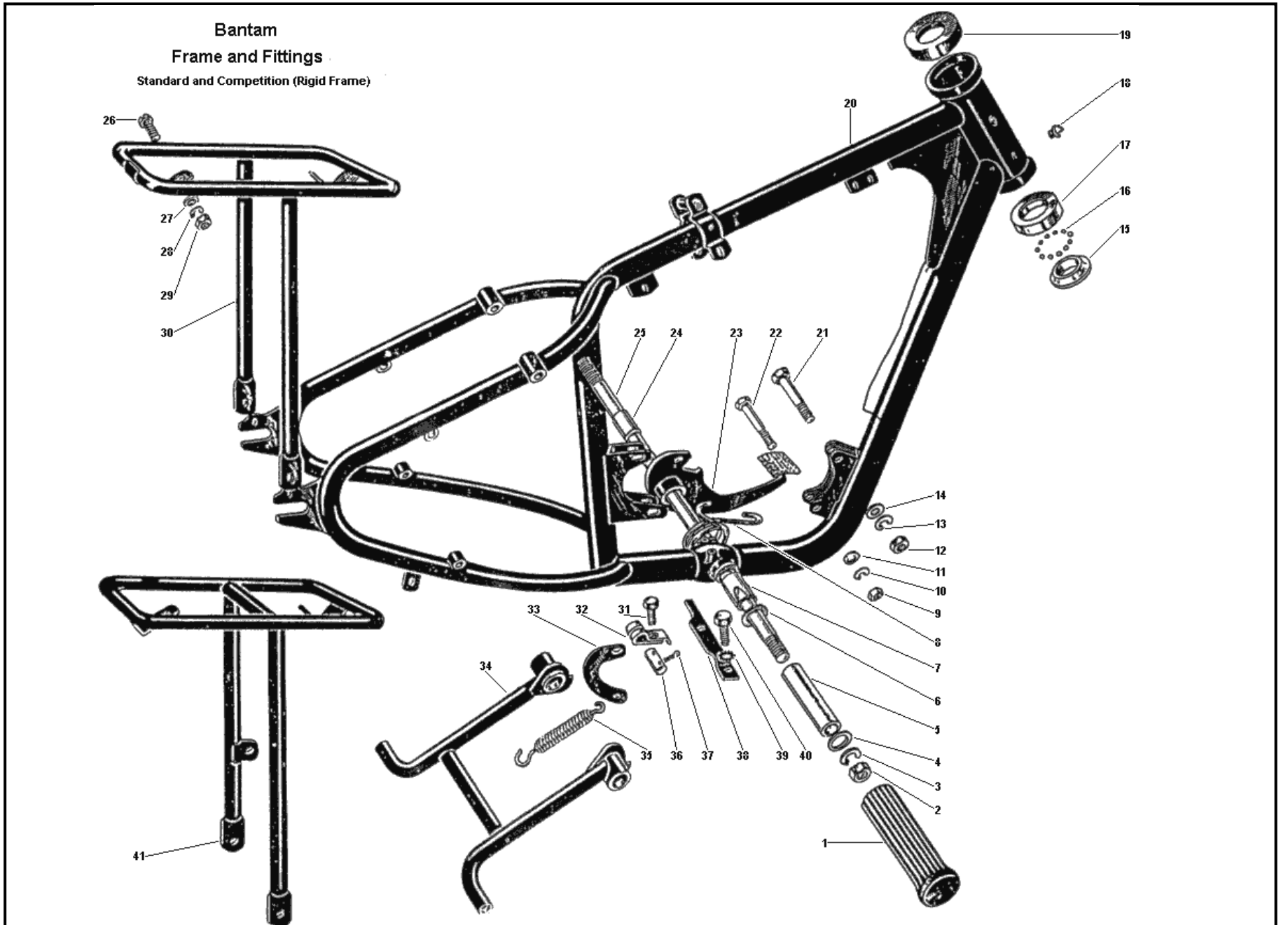

www.ClassicCycles.org

FRAME and FITTINGS

Bantam Standard and Competition (Rigid Frame).

www.ClassicCycles.org

Plate Ref. Number.	Models.	Part No.	Description.	Number per set.
24	Standard (rigid)	90-4708	Central stand and brake pedal pivot sleeve	1
	Competition (rigid)			
25	Standard (rigid)	90-4802	Footrest rod	1
	Competition (rigid)	90-4815	Footrest rod	1
26	Standard (rigid)	21-6173	Carrier fixing screw	2
27	Standard (rigid)	27-8560	Carrier fixing screw washer (plain)	2
28	Standard (rigid)	2-1462	Carrier fixing screw washer (spring)	2
29	Standard (rigid)	21-5102	Carrier fixing screw nut	2
30	Standard (rigid)	90-6801	Carrier complete	1
	Colonial (rigid)	90-6810	Carrier complete	1
31	Standard (rigid)	21-5453	Stop plate bolt	1
	Competition (rigid)			
32	Standard (rigid)	90-4724	Connecting link clip	1
	Competition (rigid)			
33	Standard (rigid)	90-4716	Central stand connecting link	1
	Competition (rigid)			
34	Standard (rigid)	90-4701	Central stand	1
	Competition (rigid)	90-4721	Central stand	1
35	Standard (rigid)	90-4718	Central stand spring	1
	Competition (rigid)			
36	Standard (rigid)	90-4723	Connecting link	1
	Competition (rigid)			
37	Standard (rigid)	35-705	Connecting link split pin	2
	Competition (rigid)			
38	Standard (rigid)	90-4707	Central stand and brake pedal stop plate	1
	Competition (rigid)			
39	Standard (rigid)	36-382	Central stand and brake pedal pivot sleeve washer (shakeproof)	2
	Competition (rigid)			
40	Standard (rigid)	21-5452	Central stand and brake pedal pivot sleeve bolt	1
	Competition (rigid)			
41	Colonial (rigid)	90-6810	Carrier complete	1

Plate 3.

FRAME and FITTINGS

Bantam Standard and Competition (Spring Frame).

Plate Ref. Number.	Models.	Part No.	Description.	Number per set.
1	Standard (spring)	90-4718	Central stand spring	1
	Competition (spring)			
2	Standard (spring)	90-4716	Central stand connecting link	1
	Competition (spring)			
3	Standard (spring)	90-4724	Connecting link clip	1
	Competition (spring)			
4	Standard (spring)	21-5453	Stop plate bolt	1
	Competition (spring)			
5	Standard (spring)	90-4707	Central stand and brake pedal stop plate	1
	Competition (spring)			
6	Standard (spring)	36-382	Central stand and brake pedal pivot sleeve bolt washer	2
	Competition (spring)		(shakeproof)	
7	Standard (spring)	21-5452	Central stand and brake pedal pivot sleeve bolt	1
	Competition (spring)			
8	Standard (spring)	90-4805	Footrest rubber	2
9	Standard (spring)	21-5106	Footrest rod nut	2
10	Standard (spring)	3-107	Footrest rod spring washer	2
11	Standard (spring)	24-5914	Footrest rubber locating washer (outside)	2
12	Standard (spring)	90-4806	Footrest rod distance tube	2
13	Standard (spring)	2-108	Footrest rubber locating washer (inside)	2
14	Standard (spring)	90-4719	Central stand sleeve (offside)	1
	Competition (spring)			
15	Standard (spring)	21-5102	Engine mounting bolt (bottom) nut	2
	Competition (spring)			
16	Standard (spring)	2-1462	Engine mounting bolt (bottom) washer (spring)	2
	Competition (spring)			
17	Standard (spring)	21-5103	Engine mounting bolt (top) nut	2
	Competition (spring)			

Plate 3.

FRAME and FITTINGS

Bantam Standard and Competition (Spring Frame).

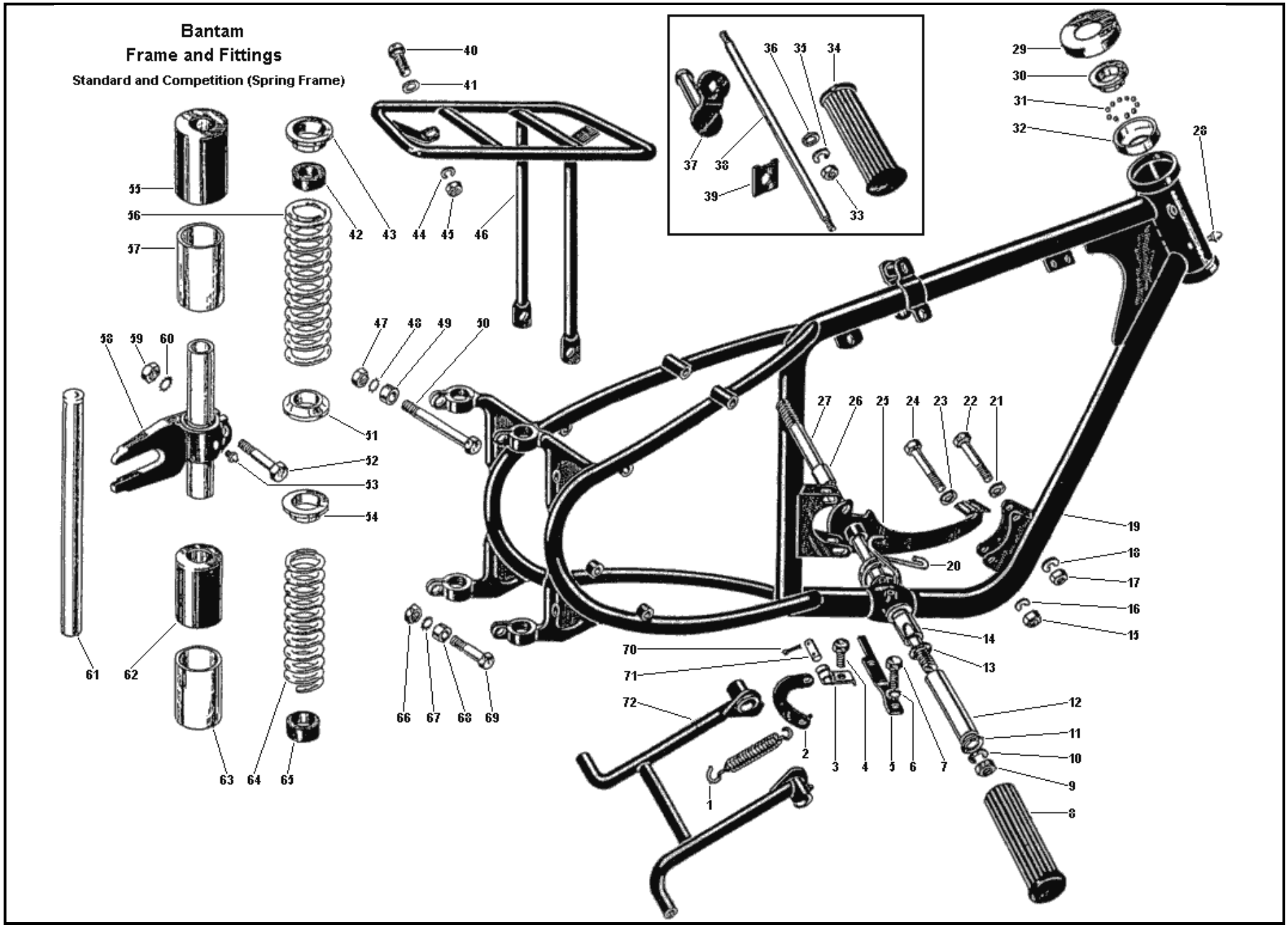

www.ClassicCycles.org

FRAME and FITTINGS

Bantam Standard and Competition (Spring Frame).

www.ClassicCycles.org

Plate Ref. Number.	Models.	Part No.	Description.	Number per set.
18	Standard (spring)	24-8784	Engine mounting bolt (top) washer (spring)	2
	Competition (spring)			
19	Standard (spring)	90-4045	Frame complete (Lucas equipment)	1
	Competition (spring)			
	Standard (spring)	90-4044	Frame complete (Wico Pacy equipment)	1
	Competition (spring)			
20	Standard (spring)	90-7008	Rear brake pedal return spring	1
	Competition (spring)			
21	Standard (spring)	2-923	Engine mounting bolt (top) washer (rear) (plain)	2
	Competition (spring)			
22	Standard (spring)	21-5670	Engine mounting bolt (top)	2
	Competition (spring)			
23	Standard (spring)	2-1374	Engine mounting bolt (bottom) washer	4
	Competition (spring)			
24	Standard (spring)	21-5620	Engine mounting bolt (bottom)	2
	Competition (spring)			
25	Standard (spring)	90-7001	Rear brake pedal complete	1
	Competition (spring)			
26	Standard (spring)	90-4708	Central stand and brake pedal pivot sleeve	1
	Competition (spring)			
27	Standard (spring)	90-4802	Footrest rod	1
28	Standard (spring)	28-2080	Ball head grease nipple	1
	Competition (spring)			
29	Standard (spring)	65-5321	Steering head dust cap	1
	Competition (spring)			
30	Standard (spring)	65-5319	Steering head ballrace cone	2
	Competition (spring)			
31	Standard (spring)	3/16"	Steering head ball	48
	Competition (spring)			
32	Standard (spring)	65-4465	Ball head cup	2
	Competition (spring)			
33	Competition (spring)	21-5105	Footrest rod nut	2
34	Competition (spring)	29-7551	Footrest rubber	2
35	Competition (spring)	3-110	Footrest rod washer (spring)	2
36	Competition (spring)	24-5914	Footrest rod locating plate washer (plain)	2
37	Competition (spring)	29-7550	Footrest bracket	2
38	Competition (spring)	90-4815	Footrest rod	1
39	Competition (spring)	90-4814	Footrest locating plate	2
40	Standard (spring)	21-6173	Carrier fixing screw	2
41	Standard (spring)	27-8560	Carrier fixing screw washer (plain)	2
42	Standard (spring)	90-4105	Plunger stop rubber buffer	4
	Competition (spring)			
43	Standard (spring)	90-4115	Plunger spring collar (top)	2
	Competition (spring)			
44	Standard (spring)	2-1462	Carrier fixing screw washer (plain)	2
45	Standard (spring)	21-5102	Carrier fixing screw nut	2
46	Standard (spring)	90-6818	Carrier complete	1
47	Standard (spring)	21-5103	Plunger column top bolt nut	2
	Competition (spring)			
48	Standard (spring)	36-382	Plunger column top bolt washer (shakeproof)	2
	Competition (spring)			
49	Standard (spring)	66-8347	Plunger column top bolt distance piece	2
	Competition (spring)			
	Standard (spring)	21-5672	Plunger column top bolt (top) (offside)	1
50	Standard (spring)	21-5677	Plunger column top bolt (top) (nearside)	1
	Competition (spring)	21-5671	Plunger column top bolt (top)	2
51	Standard (spring)	90-4112	Plunger spring collar (bottom)	2
	Competition (spring)			
52	Standard (spring)	21-5720	Bolt (plunger to lug)	2
	Competition (spring)			
53	Standard (spring)	28-2080	Lug grease nipple	2
	Competition (spring)			
54	Standard (spring)	90-4112	Rebound spring collar (top)	2
	Competition (spring)			
55	Standard (spring)	90-4111	Plunger spring shroud (outer)	2
	Competition (spring)			
56	Standard (spring)	90-4103	Plunger spring (top)	2
	Competition (spring)			

FRAME and FITTINGS

Bantam Standard and Competition (Spring Frame).

www.ClassicCycles.org

Plate Ref. Number.	Models.	Part No.	Description.	Number per set.
57	Standard (spring) Competition (spring)	90-4110	Plunger spring shroud (inner)	2
58	Standard (spring) Competition (spring)	90-6050	Rear hub mounting lug (nearside)	1
	Standard (spring) Competition (spring)	90-6051	Rear hub mounting lug (offside)	1
59	Standard (spring) Competition (spring)	21-5104	Plunger to lug bolt nut	2
60	Standard (spring) Competition (spring)	66-4707	Plunger to lug bolt washer (shakeproof)	2
61	Standard (spring) Competition (spring)	90-4121	Plunger column assembled	2
62	Standard (spring) Competition (spring)	90-4120	Rebound spring shroud (outer)	2
63	Standard (spring) Competition (spring)	90-4119	Rebound spring shroud (inner)	2
64	Standard (spring) Competition (spring)	90-4104	Rebound spring (bottom)	2
65	Standard (spring) Competition (spring)	90-4105	Plunger stop rubber buffer	4
66	Standard (spring) Competition (spring)	21-5103	Plunger column bolt nut (bottom)	2
67	Standard (spring) Competition (spring)	36-382	Plunger column bolt washer (shakeproof) (bottom)	2
68	Standard (spring) Competition (spring)	66-8347	Plunger column bolt distance piece (bottom)	2
69	Standard (spring) Competition (spring)	21-5669	Plunger column bolt (bottom)	2
70	Standard (spring) Competition (spring)	35-705	Connecting link split pin	2
71	Standard (spring) Competition (spring)	90-4723	Connecting link	1
	Standard (spring)	90-4701	Central stand	1
72	Competition (spring)	90-4721	Central stand	1

Plate 4

FRONT FORK and FITTINGS

Bantam Standard and Competition.

Plate Ref. Number.	Models.	Part No.	Description.	Number per set.
1	Standard and Comp rigid and spring	90-9011	Bulb horn unit with locknut	1
2	Standard and Comp rigid and spring	90-5067	Fork outer tube nut	2
3	Standard and Comp rigid and spring	90-5044	Fork tube oil seal	2
4	Standard and Comp rigid and spring	90-5068	Fork bush distance tube	2
5	Standard and Comp rigid and spring	90-5069	Fork tube bush	4
6	Competition rigid and spring	90-5078	Front fork spring	2
7	Standard rigid and spring	90-5060	Front fork spring	2
8	Standard and Comp rigid and spring	28-2080	Fork tube grease nipple	2
9	Standard and Comp rigid and spring	1-6033	Fork tube grease nipple washer	2
10	Standard rigid and spring	90-5065	Front fork outer tube complete	2
11	Competition rigid and spring	90-5080	Front fork outer tube complete	2

FRONT FORK and FITTINGS

Bantam Standard and Competition.

www.ClassicCycles.org

Plate Ref. Number.	Models.	Part No.	Description.	Number per set.
12	Standard and Comp rigid and spring	90-5031	Front fork top scroll	2
13	Standard and Comp rigid and spring	90-5013	Headlamp bracket (Wico Pacy lighting)	1
14	Standard and Comp rigid and spring	90-5054	Headlamp bracket (Lucas lighting)	1
15	Competition rigid and spring	90-5079	Front fork shock absorber (rubber)	2
16	Standard and Comp rigid and spring	21-5102	Top yoke plate nut	2
17	Standard and Comp rigid and spring	29-541	Top yoke plate washer (shakeproof)	2
18	Standard and Comp rigid and spring	90-5036	Top yoke plate (fitted only when speedometer head is removed)	1
19	Standard and Comp rigid and spring	21-5401	Top yoke plate bolt	2
20	Standard and Comp rigid and spring	90-5050	Steering stem plug (required when bulb horn is not fitted)	1
21	Standard and Comp rigid and spring	90-5017	Steering stem nut	1
22	Standard and Comp rigid and spring	90-5035	Steering stem locknut	1
23	Standard and Comp rigid and spring	90-5539	Steering stem cover	1
24	Standard and Comp rigid and spring	21-5103	Handlebar clip bolt nut	4
25	Standard and Comp rigid and spring	36-382	Handlebar clip bolt washer (shakeproof)	4
26	Standard and Comp rigid and spring	90-5046	Handlebar seating	2
27	Standard and Comp rigid and spring	65-5333	Handlebar clip	2
28	Standard and Comp rigid and spring	15-5155	Handlebar clip bolt washer (plain)	4
29	Standard and Comp rigid and spring	90-5082	Handlebar clip bolt	4
30	Standard and Comp rigid and spring	21-5104	Front fork top scroll nut	2
31	Standard and Comp rigid and spring	66-4707	Front fork top scroll washer (shakeproof)	2
32	Standard and Comp rigid and spring	90-5027	Front fork top nut	2
33	Standard and Comp rigid and spring	90-5028	Front fork top nut washer (plain)	2
34	Standard and Comp rigid and spring	21-5462	Top yoke clamp bolt	1
35	Standard and Comp rigid and spring	15-5155	Top yoke clamp bolt washer (plain)	2
36	Standard and Comp rigid and spring	21-5103	Top yoke clamp bolt nut	1
37	Standard and Comp rigid and spring	90-5048	Front fork top yoke	1
38	Standard and Comp rigid and spring	90-5029	Top yoke seating washer	2
39	Standard and Comp rigid and spring	90-5081	Fork leg gaiter	2
40	Competition rigid and spring	90-5074	Front fork sliding tube complete (right-hand)	1
41	Competition rigid and spring	90-5074	Front fork sliding tube complete (left-hand)	1
42	Standard rigid and spring	90-5087	Front fork sliding tube complete (right-hand)	1
43	Standard rigid and spring	90-5088	Front fork sliding tube complete (left-hand)	1
44	Standard and Comp rigid and spring	21-5103	Headlamp bracket stud nut	2
45	Standard and Comp rigid and spring	36-382	Headlamp bracket washer (shakeproof)	2
46	Standard and Comp rigid and spring	2-537	Headlamp bracket washer (plain)	4

FRONT FORK and FITTINGS

Bantam Standard and Competition.

www.ClassicCycles.org

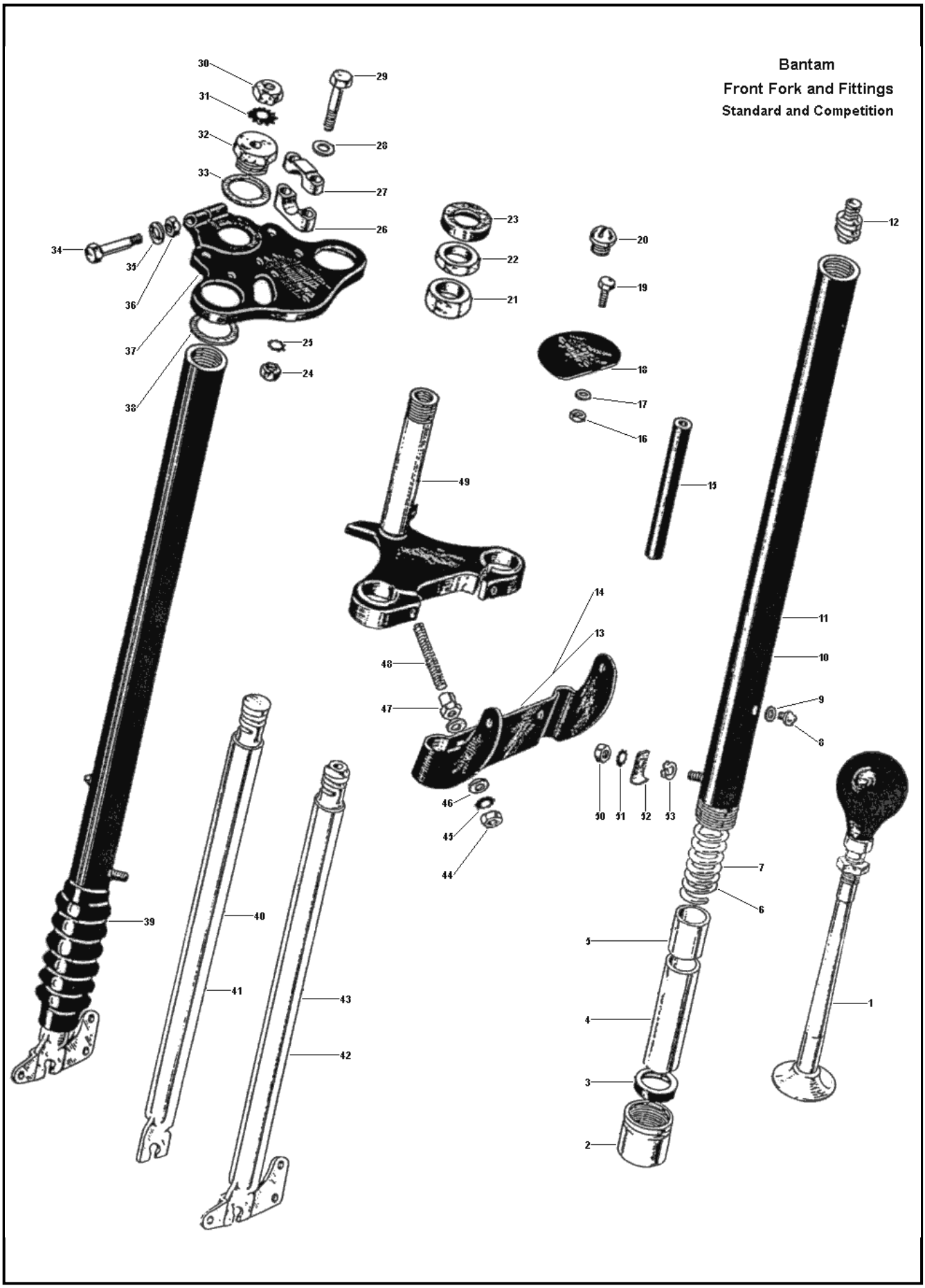

FRONT FORK and FITTINGS

Bantam Standard and Competition.

www.ClassicCycles.org

Plate Ref. Number.	Models.	Part No.	Description.	Number per set.
47	Standard and Comp rigid and spring	90-5052	Headlamp bracket and bottom yoke clamp stud nut	2
48	Standard and Comp rigid and spring	90-5051	Headlamp bracket and bottom yoke clamp stud	2
49	Standard and Comp rigid and spring	90-5004	Bottom yoke complete	1
50	Standard and Comp rigid and spring	21-5203	Front mudguard stay nut	2
51	Standard and Comp rigid and spring	36-382	Front mudguard stay nut washer (shakeproof)	2
52	Standard and Comp rigid and spring	90-5072	Front fork nut retaining clip	2
53	Standard and Comp rigid and spring	27-6043	Front fork nut retaining clip washer (spring)	2

Plate 5

FRONT HUB and WHEEL FITTINGS

Bantam Rigid and Spring Frame.

Plate Ref. Number.	Models.	Part No.	Description.	Number per set.
	Standard rigid and spring	90-5500/45	Front wheel complete with spindle and bearings (less brake and tyre)	1
1	Standard rigid and spring	90-5575	Front hub spindle nut	1
2	Standard rigid and spring	90-5544	Hub cover plate locking sleeve	1
3	Standard rigid and spring	21-5103	Brake operating lever nut	1
4	Standard rigid and spring	36-382	Brake operating lever washer (shakeproof)	1
5	Standard rigid and spring	15-5155	Brake operating lever washer (plain)	1
6	Standard rigid and spring	90-5547	Brake operating lever	1
7	Standard rigid and spring	1-5325	Brake cam bearing oil hole cover	1
8	Standard rigid and spring	90-5526	Front brake cover plate complete	1
9	Standard rigid and spring	90-5533	Brake cam complete	1
10	Standard rigid and spring	90-5520	Brake shoe complete with lining	2
11	Standard rigid and spring	90-5539	Felt retaining cup	1
12	Standard rigid and spring	90-5540	Hub felt washer	1
13	Standard rigid and spring	90-5538	Felt retaining washer (steel)	1
14	Standard rigid and spring	90-5537	Hub bearing lockring	1
15	Standard rigid and spring	90-5536	Bearing locating washer	1
16	Standard rigid and spring	90-5535	Hub bearing distance piece	1
17	Standard rigid and spring	90-5509	Front hub shell complete with spindle and bearings	1
18	Standard rigid and spring	27-6813	Front wheel spoke nipple	36
19	Standard rigid and spring	29-5846	Front wheel spoke (left-hand)	18
20	Standard rigid and spring	90-5542	Front hub spindle nut	1

FRONT HUB and WHEEL FITTINGS

Bantam Rigid and Spring Frame.

www.ClassicCycles.org

Plate Ref. Number.	Models.	Part No.	Description.	Number per set.
21	Standard rigid and spring	90-5543	Front hub spindle locknut	1
22	Standard rigid and spring	90-5545	Hub spindle shim (.010") (as required)	1
23	Standard rigid and spring	90-5546	Hub bearing locknut	1
24	Standard rigid and spring	90-5541	Front hub spindle	1
25	Standard rigid and spring	90-5539	Felt retaining cup	1
26	Standard rigid and spring	90-5540	Hub felt washer	1
27	Standard rigid and spring	90-5538	Felt retaining washer (steel)	1
28	Standard rigid and spring	90-5525	Hub bearing	1
29	Standard rigid and spring	28-2080	Hub shell grease nipple	1
30	Standard rigid and spring	27-7016	Front wheel spoke (right-hand)	18
31	Standard rigid and spring	90-5504/3	Front wheel rim (WM1-19)	1
	Standard rigid and spring	90-5504/3	Front wheel rim (WM1-19) (Colonial model)	1
32	Standard rigid and spring	90-5525	Hub bearing	1
33	Standard rigid and spring	90-5549	Brake shoe lining rivet	14
34	Standard rigid and spring	90-5522	Brake shoe lining	2
35	Standard rigid and spring	65-5904	Brake shoe spring	2
36	Standard rigid and spring	90-5546	Hub bearing locknut	1
37	Standard rigid and spring	2-443	Brake operating lever toggle nut	1
38	Standard rigid and spring	29-5871	Brake operating lever toggle	1
39	Standard rigid and spring	2-1462	Brake operating lever toggle washer (spring)	1
40	Standard rigid and spring	2-510	Brake operating lever toggle screw	1

Plate 5

FRONT HUB and WHEEL FITTINGS

Bantam Rigid and Spring Frame (Competition).

Plate Ref. Number.	Models.	Part No.	Description.	Number per set.
1	Competition rigid and spring	90-5576	Front hub spindle nut	1
2	Competition rigid and spring	29-8740	Front hub spindle nut washer	1
3	Competition rigid and spring	21-5103	Brake operating lever nut	1
4	Competition rigid and spring	90-5571	Cover plate locking nut	1
5	Competition rigid and spring	36-382	Brake operating lever washer (shakeproof)	1
6	Competition rigid and spring	15-5155	Brake operating lever washer (plain)	1
7	Competition rigid and spring	90-5547	Brake operating lever	1

FRONT HUB and WHEEL FITTINGS

Bantam Rigid and Spring Frame (Competition).

www.ClassicCycles.org

Plate Ref. Number.	Models.	Part No.	Description.	Number per set.
8	Competition rigid and spring	1-5325	Brake cam bearing oil hole cover	1
9	Competition rigid and spring	90-5526	Front brake cover plate complete	1
10	Competition rigid and spring	90-5533	Brake cam complete	1
11	Competition rigid and spring	90-5520	Brake shoe complete with lining	2
12	Competition rigid and spring	90-5539	Felt retaining cup	1
13	Competition rigid and spring	90-5540	Hub felt washer	1
14	Competition rigid and spring	90-5569	Hub bearing thrust washer	1
15	Competition rigid and spring	90-5561	Hub felt washer retainer (inner) (steel)	1
16	Competition rigid and spring	90-5559	Hub bearing	1
17	Competition rigid and spring	90-5536	Bearing locating washer	1
18	Competition rigid and spring	90-5565	Front hub spindle	1
19	Competition rigid and spring	27-6813	Front wheel spoke nipple	36
20	Competition rigid and spring	29-5846	Front wheel spoke (left-hand)	18
21	Competition rigid and spring	90-5568	Hub bearing distance piece	1
22	Competition rigid and spring	90-5567	Front hub spindle locknut	2
23	Competition rigid and spring	90-5545	Hub spindle shim (.010") (as required)	1
24	Competition rigid and spring	29-8740	Front hub spindle nut washer	1
25	Competition rigid and spring	90-5566	Front hub spindle nut	1
26	Competition rigid and spring	90-5539	Felt retaining cup	1
27	Competition rigid and spring	90-5540	Hub felt washer	1
28	Competition rigid and spring	90-5561	Hub felt washer retainer (inner) (steel)	1
29	Competition rigid and spring	90-5559	Front hub bearing	1
30	Competition rigid and spring	90-5560	Bearing abutment ring	1
31	Competition rigid and spring	28-2080	Hub shell grease nipple	1
32	Competition rigid and spring	90-5556	Front hub shell complete with spindle and bearings	1
33	Competition rigid and spring	27-7016	Front wheel spoke (right-hand)	18
34	Competition rigid and spring	90-5505/3	Front wheel rim (WM1-19)	1
35	Competition rigid and spring	90-5549	Brake shoe lining rivet	14
36	Competition rigid and spring	90-5522	Brake shoe lining	2
37	Competition rigid and spring	65-5904	Brake shoe spring	2
38	Competition rigid and spring	90-5570	Brake plate washer	1
39	Competition rigid and spring	2-443	Brake operating lever toggle nut	1
40	Competition rigid and spring	29-5871	Brake operating lever toggle	1
41	Competition rigid and spring	2-1462	Brake operating lever toggle washer (spring)	1
42	Competition rigid and spring	2-510	Brake operating lever toggle screw	1

Plate 5.

FRONT HUB and WHEEL FITTINGS

Bantam Rigid and Spring Frame (Competition)

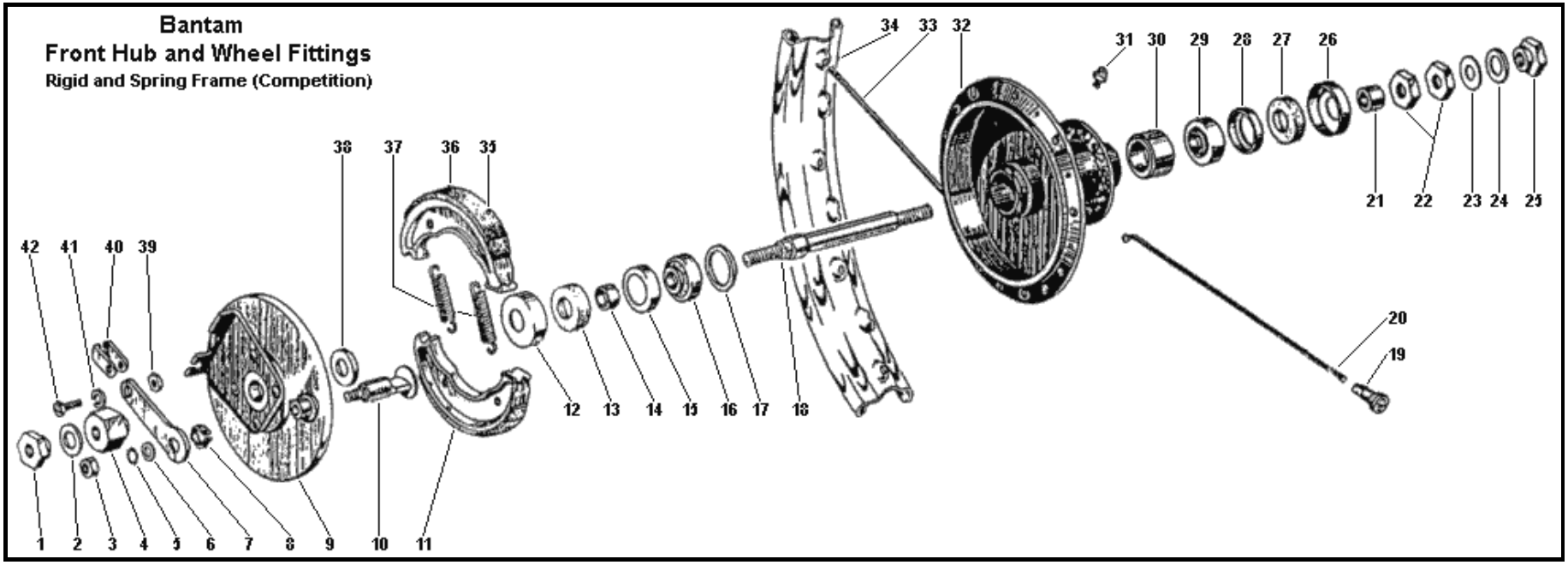

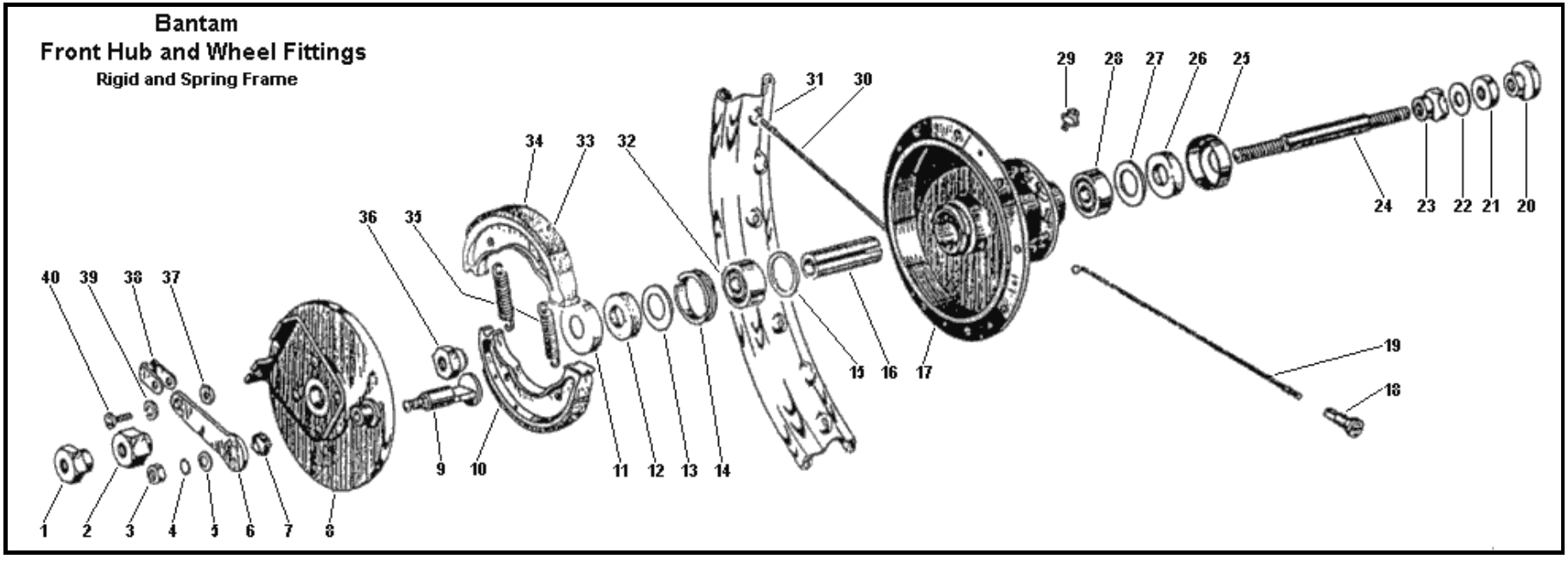

www.ClassicCycles.org

REAR HUB and WHEEL FITTINGS

Bantam (Rigid Frame)

www.ClassicCycles.org

Plate Ref. Number.	Models.	Part No.	Description.	Number per set.
	Rigid Frame	90-6061/45	Rear wheel complete with spindle and bearings (less brake and tyre)	1
	Rigid Frame Competition	90-6000/45	Rear wheel complete with spindle and bearings (less brake and tyre)	1
1	Rigid Frame	90-6029	Rear hub barrel cap (supplied only when speedometer is not fitted)	1
2	Rigid Frame	90-6084	Chain adjuster cap	2
3	Rigid Frame	1-6032	Chain adjuster nut	2
4	Rigid Frame	90-5542	Hub spindle nut	2
5	Rigid Frame	90-6086	Chain adjuster	2
6	Rigid Frame	90-5543	Hub spindle locknut	2
7	Rigid Frame	2-1945	Speedometer drive washer	1
8	Rigid Frame	90-6024	Speedometer drive	1
9	Rigid Frame	90-5543	Hub spindle locknut	2
10	Rigid Frame	90-5546	Hub bearing locknut	2
11	Rigid Frame	90-5539	Felt retaining cup	2
12	Rigid Frame	90-5540	Hub washer (felt)	2
13	Rigid Frame	90-5538	Felt retaining washer (steel)	2
14	Rigid Frame	90-5525	Hub bearing	2
15	Rigid Frame	90-6023	Hub spindle	1
16	Rigid Frame	28-2080	Rear hub grease nipple	1
17	Rigid Frame	90-6009	Rear hub complete with spindle and bearings	1
	Competition			
	Rigid Frame	90-6035	Rear hub complete with spindle and bearings	1
18	Rigid Frame	15-7072	Rear wheel spoke (left-hand)	18
19	Rigid Frame	90-5504/3	Rear wheel rim	1
	Competition			
	Rigid Frame	90-5505/3	Rear wheel rim	1
20	Rigid Frame	90-5522	Brake shoe lining	2
21	Rigid Frame	90-5539	Felt retaining cup	2
22	Rigid Frame	90-5546	Hub bearing locknut	2
23	Rigid Frame	90-5549	Brake shoe lining rivet	14
24	Rigid Frame	90-5520	Brake shoe with lining	2
25	Rigid Frame	65-5904	Brake shoe spring	2
26	Rigid Frame	90-6020	Rear hub cover plate	1
27	Rigid Frame	15-5155	Brake operating lever washer	1
28	Rigid Frame	36-382	Brake operating lever washer	1
29	Rigid Frame	21-5103	Brake operating lever nut	1
30	Rigid Frame	90-5544	Cover plate locking sleeve	1
31	Rigid Frame	90-6086	Chain adjuster	2
32	Rigid Frame	90-5542	Hub spindle nut	2
33	Rigid Frame	90-6084	Chain adjuster cap	2
34	Rigid Frame	1-6032	Chain adjuster nut	2
35	Rigid Frame	90-6026	Brake operating lever	1
36	Rigid Frame	90-5533	Brake cam	1
37	Rigid Frame	90-5540	Hub washer (felt)	2
38	Rigid Frame	90-5537	Hub bearing lockring	1
39	Rigid Frame	90-5538	Felt retaining washer (steel)	2
40	Rigid Frame	90-5525	Hub bearing	2
41	Rigid Frame	90-5536	Hub bearing thrust washer	1
42	Rigid Frame	90-6022	Hub bearing distance piece	1
43	Rigid Frame	29-5846	Rear wheel spoke (right-hand)	18
44	Rigid Frame	27-6813	Spoke nipple	36
45	Rigid Frame	90-9015	Transmission chain (rear)	1
	Rigid Frame Competition	90-9019	Transmission chain (rear)	1

REAR HUB and WHEEL FITTINGS

Bantam Rigid Frame and Spring Frame

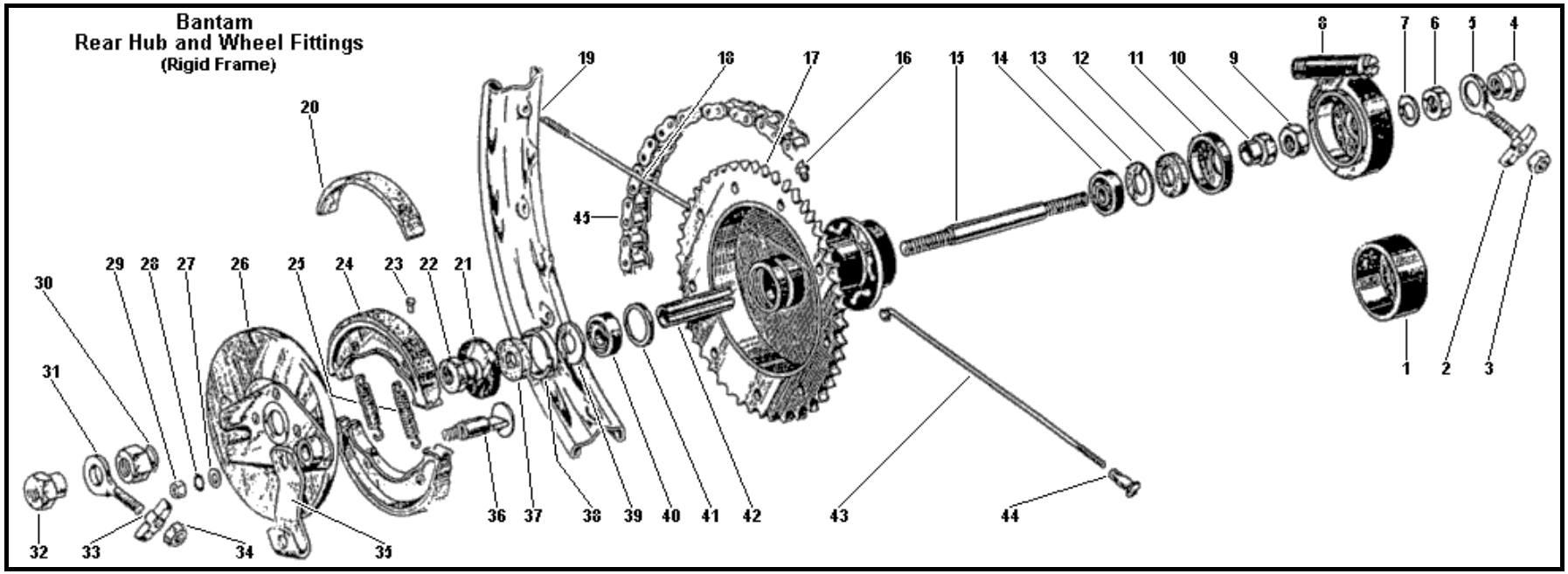

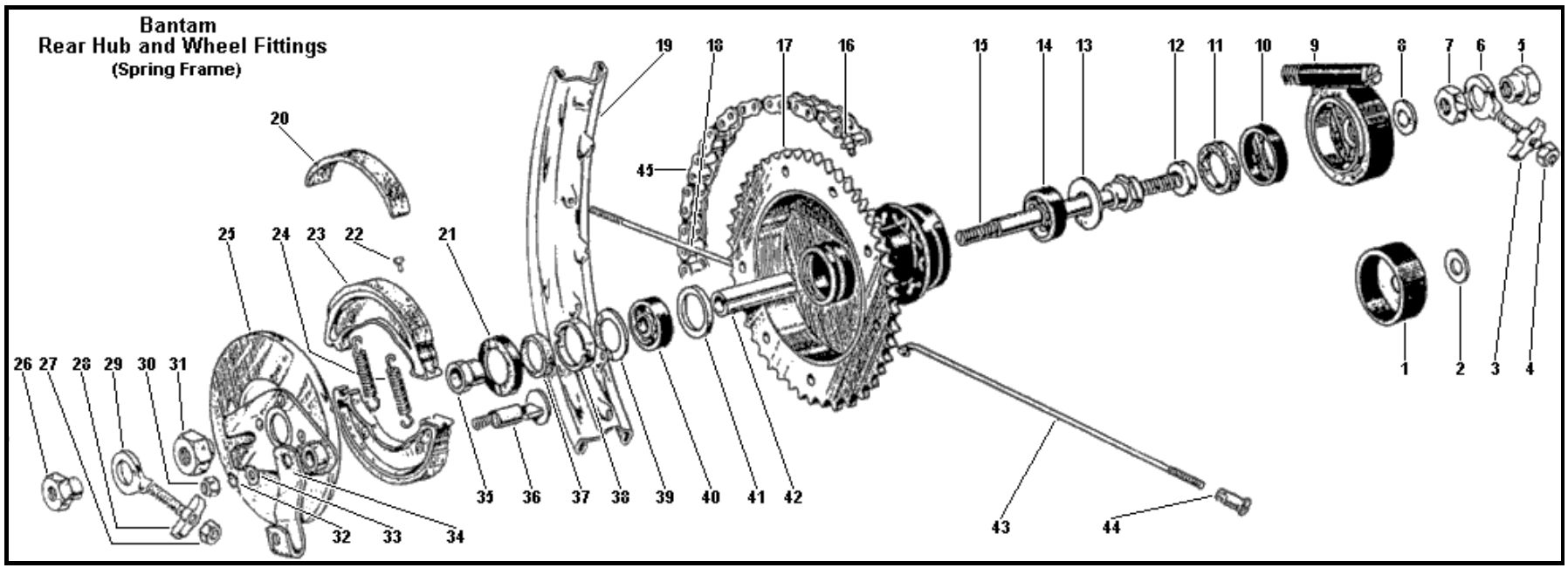

www.ClassicCycles.org

REAR HUB and WHEEL FITTINGS

www.ClassicCycles.org

Bantam (Spring Frame)

Plate Ref. Number.	Models.	Part No.	Description.	Number per set.
	Spring Frame	90-6006/45	Rear wheel complete with spindle and bearings (less brake and tyres)	1
	Spring Frame Competition	90-6081/45	Rear wheel complete with spindle and bearings (less brake and tyres)	1
1	Spring Frame	66-5541	Rear hub barrel cap (supplied only when speedometer is not fitted)	1
2	Spring Frame	24-5909	Rear hub barrel cap washer	1
3	Spring Frame	90-6084	Chain adjuster cap	2
4	Spring Frame	1-6032	Chain adjuster nut	2
5	Spring Frame	90-6067	Hub spindle nut	2
6	Spring Frame	90-6085	Chain adjuster	2
7	Spring Frame	90-6066	Hub spindle locknut	1
8	Spring Frame	29-8740	Speedometer drive washer	1
9	Spring Frame	66-6266	Speedometer drive	1
10	Spring Frame	90-6072	Felt retaining cup	2
11	Spring Frame	90-6073	Hub washer (felt) (offside)	1
12	Spring Frame	90-6065	Hub distance piece	1
13	Spring Frame	90-6075	Felt retaining washer (steel)	2
14	Spring Frame	90-6063	Hub bearing	2
15	Spring Frame	90-6092	Hub spindle with nut	1
16	Spring Frame	28-2080	Hub grease nipple	1
17	Spring Frame	90-6090	Rear hub complete with spindle and bearings	1
	Spring Frame Competition	90-6091	Rear hub complete with spindle and bearings	1
18	Spring Frame	15-7072	Rear wheel spoke (left-hand)	18
19	Spring Frame	90-5504/3	Rear wheel rim	1
	Spring Frame Competition	90-5504/3	Rear wheel rim	1
20	Spring Frame	90-5522	Brake shoe lining	2
21	Spring Frame	90-6072	Felt retaining cup	2
22	Spring Frame	90-5549	Brake shoe lining rivet	14
23	Spring Frame	90-5520	Brake shoe with lining	2
24	Spring Frame	65-5904	Brake shoe spring	2
25	Spring Frame	90-6059	Rear hub cover plate complete	1
26	Spring Frame	90-6067	Hub spindle nut	2
27	Spring Frame	1-6032	Chain adjuster nut	2
28	Spring Frame	90-6084	Chain adjuster cap	2
29	Spring Frame	90-6085	Chain adjuster	2
30	Spring Frame	21-5103	Brake operating lever nut	1
31	Spring Frame	90-6096	Cover plate locking sleeve	1
32	Spring Frame	36-382	Brake operating lever washer	1
33	Spring Frame	15-5155	Brake operating lever washer	1
34	Spring Frame	90-6043	Brake operating lever	1
35	Spring Frame	90-6095	Hub distance piece	1
36	Spring Frame	90-5533	Brake cam	1
37	Spring Frame	90-6074	Hub washer (felt) (nearside)	1
38	Spring Frame	90-6071	Hub bearing lockring	1
39	Spring Frame	90-6075	Felt retaining washer (steel)	1
40	Spring Frame	90-6063	Hub bearing	2
41	Spring Frame	90-6076	Hub bearing thrust washer	1
42	Spring Frame	90-6064	Hub bearing distance piece	1
43	Spring Frame	29-5846	Rear wheel spoke (right-hand)	18
44	Spring Frame	27-6813	Spoke nipple	36
45	Spring Frame	90-9037	Transmission chain (rear)	1

ACCESSORIES

Bantam Standard and Competition Rigid and Spring Frame

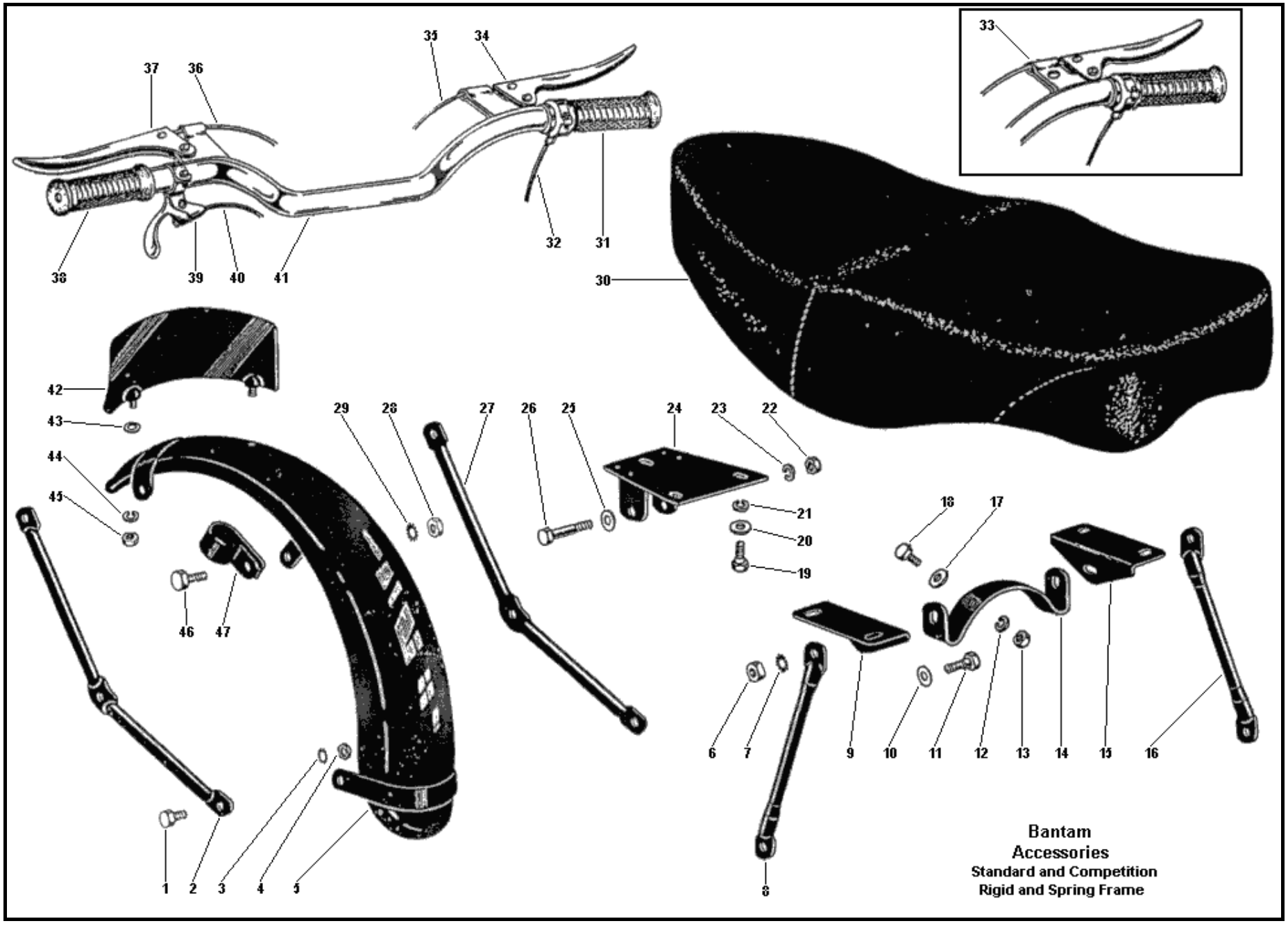

www.ClassicCycles.org

ACCESSORIES

www.ClassicCycles.org

Bantam Standard and Competition (Rigid and Spring Frame).

Plate Ref. Number.	Models.	Part No.	Description.	Number per set.
1	Competition rigid and spring	21-5400	Front mudguard and stay bolt	4
2	Competition rigid and spring	90-6509	Front mudguard stay (left-hand)	1
3	Competition rigid and spring	29-541	Front mudguard and stay washer (shakeproof)	4
4	Competition rigid and spring	21-5202	Front mudguard and stay bolt nut	4
5	Competition rigid and spring	90-6507	Front mudguard with fixed fittings	1
6	Standard (spring)	21-5103	Dual seat stay bolt nut	2
7	Standard (spring)	36-382	Dual seat stay bolt washer (shakeproof)	2
8	Standard (spring)	90-9100	Dual seat stay complete (nearside)	1
9	Standard (spring)	90-9096	Dual seat rear support bracket	1
10	Standard (spring)	2-923	Dual seat stay bolt washer (plain)	2
11	Standard (spring)	21-5454	Dual seat stay bolt	2
12	Standard (spring)	2-1462	Dual seat mudguard bridge bolt washer (spring)	2
13	Standard (spring)	21-5102	Dual seat mudguard bridge bolt nut	2
14	Standard (spring)	90-9097	Dual seat mudguard bridge	1
15	Standard (spring)	90-9096	Dual seat rear support bracket	1
16	Standard (spring)	90-9098	Dual seat stay complete (offside)	1
17	Standard (spring)	27-8560	Dual seat mudguard bridge bolt washer (plain)	2
18	Standard (spring)	21-5401	Dual seat mudguard bridge bolt	2
19	Standard (spring)	2-129	Dual seat fixing bolt	7
20	Standard (spring)	2-923	Dual seat fixing bolt washer (plain)	7
21	Standard (spring)	35-33	Dual seat fixing bolt washer (spring)	7
22	Standard (spring)	21-5103	Dual seat front fixing bolt nut	1
23	Standard (spring)	35-33	Dual seat front fixing bolt washer (spring)	1
24	Standard (spring)	90-9093	Dual seat front support bracket complete	1
25	Standard (spring)	2-923	Dual seat front fixing bolt washer (plain)	1
26	Standard (spring)	21-5461	Dual seat front fixing bolt	1
27	Competition rigid and spring	90-6508	Front mudguard stay (right-hand)	1
28	Competition rigid and spring	21-5103	Front mudguard support clip bolt nut	2
29	Competition rigid and spring	36-382	Front mudguard support clip bolt washer (shakeproof)	2
30	Standard (spring)	67-9087	Dual seat complete	1
31	Standard and Comp. rigid and spring	65-8503	Twist grip rubber grip	1
32	Standard and Comp. rigid and spring	90-8515	Throttle cable and cover complete	1
33	Standard and Comp. rigid and spring	90-4979	Handlebar (Lucas lighting)	1
34	Standard and Comp. rigid and spring	29-8812	Front brake control lever	1
35	Standard and Comp. rigid and spring	90-8520	Front brake cable and cover	1
36	Standard and Comp. rigid and spring	90-8510	Clutch control cable and cover	1
37	Standard and Comp. rigid and spring	29-8832	Clutch control lever	1
38	Standard and Comp. rigid and spring	65-8502	Dummy grip (left-hand bar)	1
39	Competition rigid and spring	66-8513	Release valve control complete	1
40	Competition rigid and spring	90-8525	Release valve cable and cover	1
41	Standard and Comp. rigid and spring	90-4970	Handlebar (Wico Pacy lighting)	1
42	Competition rigid and spring	65-6576	Front number plate complete	1
43	Competition rigid and spring	2-6537	Front number plate stud washer (plain)	1
44	Competition rigid and spring	2-1462	Front number plate stud washer (spring)	2
45	Competition rigid and spring	2-2395	Front number plate stud nut	2
46	Competition rigid and spring	21-5452	Front mudguard support clip bolt	2
47	Competition rigid and spring	90-6505	Front mudguard support clip	2

ACCESSORIES

Bantam Standard and Competition Rigid and Spring Frame

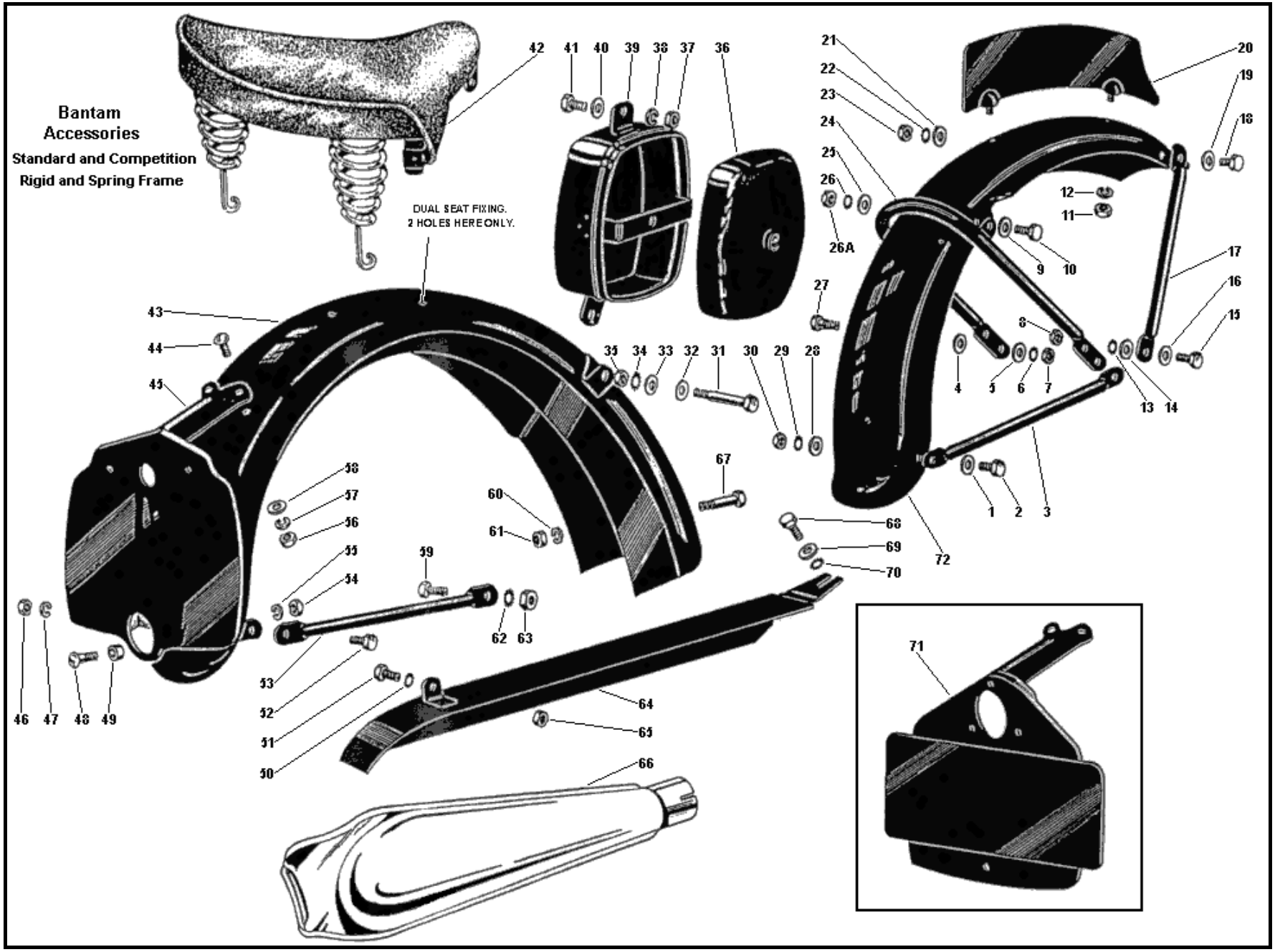

ACCESSORIES

Bantam Standard and Competition (Rigid and Spring Frame).

www.ClassicCycles.org

Plate Ref. Number.	Models.	Part No.	Description.	Number per set.
1	Standard and Comp. rigid and spring	27-8560	Front mudguard stay (rear) bolt washer	2
2	Standard and Comp. rigid and spring	21-5400	Front mudguard to rear stay bolt	2
3	Standard and Comp. rigid and spring	90-6531	Front mudguard stay (rear)	2
4	Standard and Comp. rigid and spring	27-8560	Front mudguard loopstay to fork bolt washer	4
5	Standard and Comp. rigid and spring	27-8560	Front mudguard loopstay to fork bolt washer	4
6	Standard and Comp. rigid and spring	29-541	Front mudguard loopstay to fork bolt washer (shakeproof)	4
7	Standard and Comp. rigid and spring	21-5202	Front mudguard loopstay to fork bolt nut	4
8	Standard and Comp. rigid and spring	21-5202	Front mudguard stay (front) bolt nut	2
9	Standard and Comp. rigid and spring	27-8560	Mudguard to loopstay fixing bolt washer	2
10	Standard and Comp. rigid and spring	21-5401	Mudguard to loopstay fixing bolt	2
11	Standard and Comp. rigid and spring	2-2395	Front number plate fixing stud nut	2
12	Standard and Comp. rigid and spring	2-1462	Front number plate fixing stud washer (spring)	2
13	Standard and Comp. rigid and spring	29-541	Front mudguard stay (front) bottom fixing bolt washer (shakeproof)	2
14	Standard and Comp. rigid and spring	27-8560	Front mudguard stay (front) bottom fixing bolt washer (plain)	2
15	Standard and Comp. rigid and spring	21-5401	Front mudguard stay (front) bottom fixing bolt	2
16	Standard and Comp. rigid and spring	27-8560	Front mudguard stay (front) bottom fixing bolt washer (plain)	2
17	Standard and Comp. rigid and spring	90-6530	Front mudguard stay (front)	2
18	Standard and Comp. rigid and spring	21-5400	Front mudguard to stay bolt	2
19	Standard and Comp. rigid and spring	27-8560	Front mudguard to stay bolt washer (plain)	2
20	Standard and Comp. rigid and spring	65-6576	Front number plate complete	1
21	Standard and Comp. rigid and spring	27-8560	Front mudguard to stay bolt washer (plain)	2
22	Standard and Comp. rigid and spring	29-541	Front mudguard to stay bolt washer (shakeproof)	2
23	Standard and Comp. rigid and spring	21-5202	Front mudguard to stay bolt nut	2
24	Standard and Comp. rigid and spring	90-6528	Mudguard loopstay complete	1
25	Standard and Comp. rigid and spring	27-8560	Mudguard to loopstay fixing bolt washer	2
26	Standard and Comp. rigid and spring	29-541	Mudguard to loopstay fixing bolt washer (shakeproof)	2
26A	Standard and Comp. rigid and spring	21-5202	Mudguard to loopstay fixing bolt nut	2
27	Standard and Comp. rigid and spring	21-5403	Loopstay to fork bolt	4
28	Standard and Comp. rigid and spring	27-8560	Front mudguard stay (rear) bottom fixing bolt washer	2
29	Standard and Comp. rigid and spring	29-541	Front mudguard stay (rear) bottom fixing bolt washer (shakeproof)	2
30	Standard and Comp. rigid and spring	21-5202	Front mudguard stay (rear) bottom fixing bolt nut	2

ACCESSORIES

Bantam Standard and Competition (Rigid and Spring Frame).

www.ClassicCycles.org

Plate Ref. Number.	Models.	Part No.	Description.	Number per set.
31	Standard (rigid)	21-5462	Mudguard and saddle fixing bolt	2
32	Standard (rigid)	2-923	Mudguard and saddle fixing bolt washer (plain)	2
33	Standard (rigid)	2-923	Mudguard and saddle fixing bolt washer (plain)	2
34	Standard (rigid)	36-382	Mudguard and saddle fixing bolt washer (shakeproof)	2
35	Standard (rigid)	21-5103	Mudguard and saddle fixing bolt nut	2
36	Standard and Comp. rigid and spring	90-9081	Toolbox lid complete	1
37	Standard and Comp. rigid and spring	21-5102	Toolbox fixing bolt nut (Wico Pacy equipment)	1
38	Standard and Comp. rigid and spring	2-1462	Toolbox fixing bolt washer (spring) (Wico Pacy equipment)	1
39	Standard and Comp. rigid and spring	90-9076	Toolbox body only (Wico Pacy equipment)	1
40	Standard and Comp. rigid and spring	27-8560	Toolbox fixing bolt washer (plain) (Wico Pacy equipment)	1
41	Standard and Comp. rigid and spring	21-5401	Toolbox fixing bolt (Wico Pacy equipment)	1
42	Standard and Comp. rigid and spring	90-9033	Saddle	1
43	Standard (rigid)	90-6753	Rear mudguard with fixed fittings	1
	Standard (rigid)	90-6754	Rear mudguard with fixed fittings (dual seat)	1
44	Standard and Comp. rigid and spring	21-6173	Rear number plate fixing screw (top)	2
45	Standard and Comp. rigid and spring	90-6797	Rear number plate complete (lucas lighting)	1
46	Standard (rigid)	21-5102	Mudguard stay fixing bolt nut (rear)	2
47	Standard (rigid)	2-1462	Mudguard stay rear fixing bolt washer (spring)	2
48	Standard (rigid)	21-6175	Rear number plate fixing screw (bottom)	1
49	Standard (rigid)	15-7383	Rear number plate washer (rubber)	1
50	Standard (rigid)	29-541	Rear chainguard rear fixing bolt washer (shakeproof)	1
51	Standard (rigid)	21-5401	Rear chainguard fixing bolt (rear)	1
52	Standard (rigid)	21-5401	Mudguard stay fixing bolt (rear)	2
53	Standard (rigid)	90-6756	Rear mudguard bottom stay	2
54	Standard (rigid)	21-5102	Rear number plate bottom fixing screw nut	1
55	Standard (rigid)	2-1462	Rear number plate bottom fixing screw washer (spring)	1
56	Standard (rigid)	21-5102	Rear number plate top fixing screw nut	2
	Competition rigid and spring	21-5102	Rear number plate top fixing screw nut	2
57	Standard (rigid)	2-1462	Rear number plate top fixing screw washer (spring)	2
	Competition rigid and spring	2-1462	Rear number plate top fixing screw washer (spring)	2
58	Standard (rigid)	27-8560	Rear number plate top fixing screw washer (plain)	2
	Competition rigid and spring	27-8560	Rear number plate top fixing screw washer (plain)	2
59	Standard (rigid)	21-5452	Mudguard stay bolt (chainstay end)	2
60	Standard (rigid)	2-1462	Mudguard front fixing bolt washer (spring)	1
61	Standard (rigid)	21-5102	Mudguard front fixing bolt nut	1
62	Standard (rigid)	36-382	Mudguard stay bolt washer (shakeproof) (chainstay end)	2
63	Standard (rigid)	21-5103	Mudguard stay bolt nut (chainstay end)	2
64	Standard (rigid)	90-7701	Rear chainguard complete	1
65	Standard (rigid)	21-5102	Rear chainguard fixing bolt nut (rear)	1
66	Standard and Comp. rigid and spring	90-3005	Silencer complete	1
67	Standard (rigid)	21-5409	Mudguard fixing bolt (front)	1
68	Standard (rigid)	15-87	Rear chainguard fixing bolt (front)	1
69	Standard (rigid)	27-8560	Rear chainguard front fixing bolt washer (plain)	1
70	Standard (rigid)	29-541	Rear chainguard front fixing bolt washer (shakeproof)	1
71	Standard and Comp. rigid and spring	90-6781	Rear number plate (Lucas lighting) (Australia only)	1
72	Standard rigid and spring	90-6527	Front mudguard with fixed fittings	1

REAR MUDGUARD and FITTINGS

www.ClassicCycles.org

Bantam Competition (Rigid and Spring Frame).

Plate Ref. Number.	Models.	Part No.	Description.	Number per set.
1	Competition (spring)	90-7708	Rear chainguard complete	1
2	Competition (spring)	90-6788	Rear mudguard with fixed fittings	1
3	Competition (spring)	21-5409	Mudguard fixing bolt (front)	1
4	Competition (spring)	21-5464	Mudguard and saddle fixing bolt	2
5	Competition rigid and spring	2-47	Chainguard and mudguard fixing screw nut	2
6	Competition rigid and spring	29-3319	Chainguard and mudguard fixing screw washer (shakeproof)	2
7	Competition (rigid)	90-7702	Rear chainguard complete	1
8	Competition rigid and spring	29-541	Rear chainguard front fixing bolt washer (shakeproof)	1
9	Competition rigid and spring	27-8560	Rear chainguard front fixing bolt washer (plain)	1
10	Competition rigid and spring	15-87	Rear chainguard fixing bolt (front)	1
11	Competition (rigid)	90-6765	Rear mudguard with fixed fittings	1
12	Competition (rigid)	21-5409	Mudguard fixing bolt (front)	1
13	Competition (rigid)	21-5462	Mudguard and saddle fixing bolt	2
14	Competition rigid and spring	21-5453	Saddle carrier and spring bolt	2
15	Competition rigid and spring	2-923	Saddle carrier and spring bolt washer (plain)	2
16	Competition rigid and spring	90-9027	Saddle carrier leg complete (right-hand)	1
17	Competition rigid and spring	2-923	Saddle carrier front fixing bolt washer (plain)	1
18	Competition rigid and spring	21-5461	Saddle carrier fixing bolt (front)	1
19	Competition rigid and spring	36-382	Saddle carrier and spring bolt washer (shakeproof)	2
20	Competition rigid and spring	21-5103	Saddle carrier and spring bolt nut	2
21	Competition rigid and spring	90-9028	Saddle carrier leg complete (left-hand)	1
22	Competition rigid and spring	36-382	Saddle carrier front fixing bolt washer (shakeproof)	1
23	Competition rigid and spring	21-5103	Saddle carrier front fixing bolt nut	1
24	Competition rigid and spring	21-6173	Mudguard stay screw	4
25	Competition (rigid)	90-6766	Rear mudguard upright stay	1
26	Competition rigid and spring	21-6173	Rear number plate fixing screw (bottom)	1
27	Competition rigid and spring	15-7383	Rear number plate washer (rubber)	1
28	Competition rigid and spring	27-8560	Rear number plate bottom fixing screw washer (plain)	1
29	Competition rigid and spring	2-1462	Rear number plate bottom fixing screw washer (spring)	1
30	Competition rigid and spring	21-5202	Rear number plate bottom fixing screw nut	1
31	Competition (rigid)	90-6770	Rear mudguard bottom stay	1
32	Competition (rigid)	21-5452	Mudguard stay bolt (chainstay end)	2
33	Competition rigid and spring	21-5102	Mudguard and stay screw nut	4
34	Competition rigid and spring	29-541	Mudguard and stay screw washer (shakeproof)	4
35	Competition rigid and spring	27-8560	Mudguard and stay screw washer (plain)	4
36	Competition (rigid)	21-5103	Mudguard and saddle fixing bolt nut	2
37	Competition (rigid)	36-382	Mudguard and saddle fixing bolt washer (shakeproof)	2
38	Competition (rigid)	2-1462	Mudguard front fixing bolt washer (spring)	1
39	Competition (rigid)	21-5102	Mudguard front fixing bolt nut	1
40	Competition (rigid)	36-382	Mudguard stay bolt washer (shakeproof) (chainstay end)	2
41	Competition (rigid)	21-5103	Mudguard stay bolt nut (chainstay end)	2
42	Competition (rigid)	21-5401	Rear chainguard fixing bolt (rear)	1
43	Competition (rigid)	29-541	Rear chainguard rear fixing bolt washer (shakeproof)	1
44	Competition (rigid)	21-5102	Rear chainguard rear fixing bolt nut	1
45	Competition rigid and spring	2-1309	Chainguard and mudguard fixing screw	2

REAR MUDGUARD and FITTINGS

www.ClassicCycles.org

Bantam Competition (Rigid and Spring Frame).

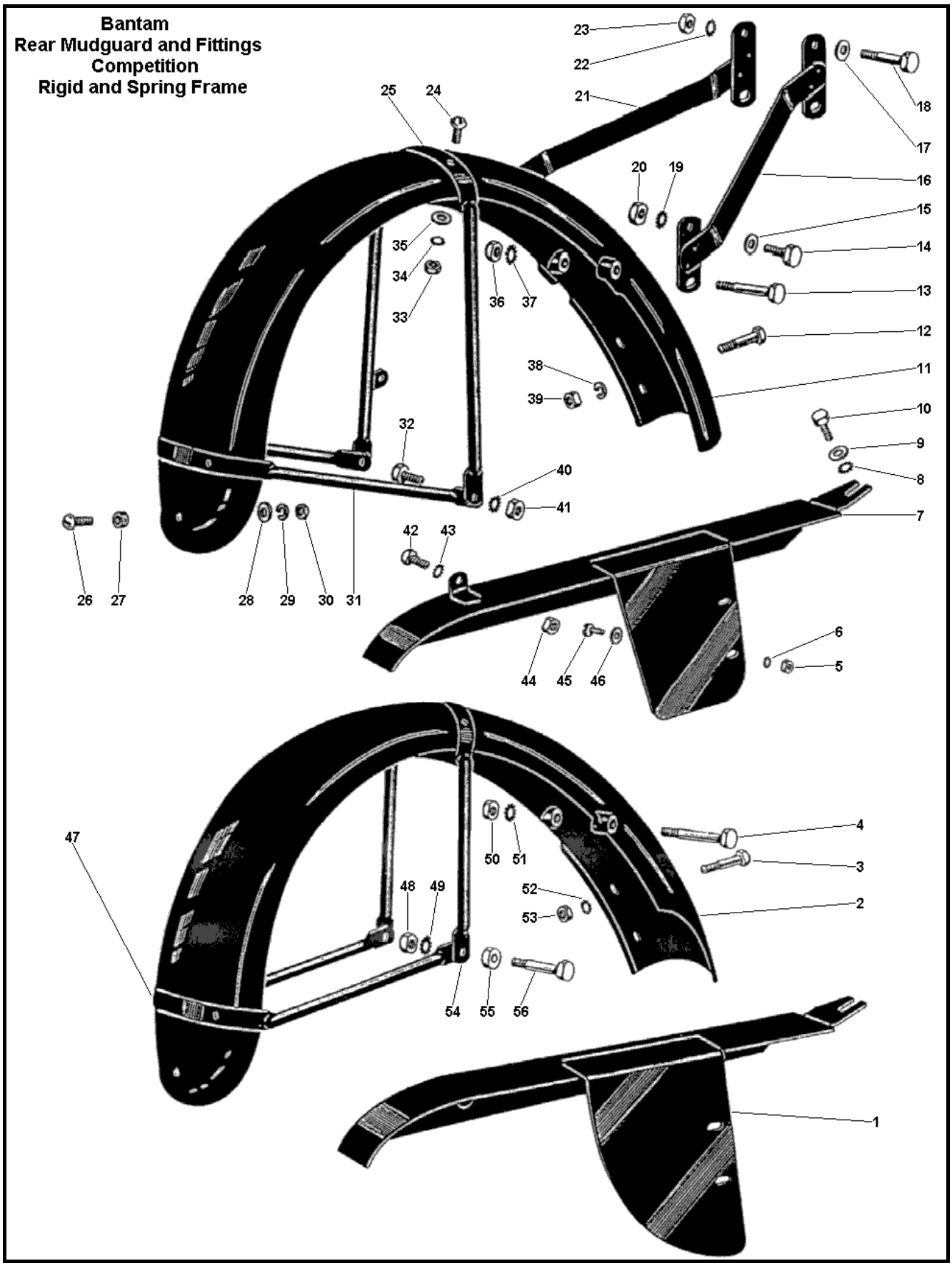

REAR MUDGUARD and FITTINGS

www.ClassicCycles.org

Bantam Competition (Rigid and Spring Frame).

Plate Ref. Number.	Models.	Part No.	Description.	Number per set.
1	Competition (spring)	90-7708	Rear chainguard complete	1
46	Competition rigid and spring	1-4621	Chainguard and mudguard fixing screw washer (plain)	2
47	Competition (spring)	90-6789	Rear mudguard bottom stay	1
48	Competition (spring)	21-5103	Mudguard stay bolt nut (chainstay end)	2
49	Competition (spring)	36-382	Mudguard stay bolt washer (shakeproof) (chainstay end)	2
50	Competition (spring)	21-5103	Mudguard and saddle fixing bolt nut	2
51	Competition (spring)	36-382	Mudguard and saddle fixing bolt washer (shakeproof)	2
52	Competition (spring)	29-541	Mudguard front fixing bolt washer (shakeproof)	1
53	Competition (spring)	21-5102	Mudguard front fixing bolt nut	1
54	Competition (spring)	90-6790	Rear mudguard upright stay	1
55	Competition (spring)	15-7563	Mudguard stay distance piece	2
56	Competition (spring)	21-5671	Mudguard stay bolt (chainstay end)	2

Plate 10

ACCESSORIES

Bantam Standard and Competition (Rigid and Spring Frame).

Plate Ref. Number.	Models.	Part No.	Description.	Number per set.
1	Standard (spring)	90-7707	Rear chainguard complete	1
2	Standard (spring)	29-541	Rear chainguard front fixing bolt washer (shakeproof)	1
3	Standard (spring)	27-8560	Rear chainguard front fixing bolt washer (plain)	1
4	Standard (spring)	15-87	Rear chainguard fixing bolt (front)	1
5	Standard (spring)	21-5409	Mudguard fixing bolt (front)	1
6	Standard (spring)	90-6793	Mudguard and saddle fixing stud	1
7	Standard (spring)	21-5103	Mudguard and saddle fixing stud nut	2
8	Standard (spring)	36-382	Mudguard and saddle fixing stud washer (shakeproof)	2
9	Standard (spring)	2-923	Mudguard and saddle fixing stud washer (plain)	4
10	Standard (spring)	90-9081	Toolbox lid complete	1
11	Standard and Comp. rigid and spring	21-5103	Toolbox fixing bolt nut (Lucas lighting)	1
12	Standard and Comp. rigid and spring	36-382	Toolbox fixing bolt washer (shakeproof) (Lucas lighting)	1
13	Standard and Comp. rigid and spring	90-9086	Toolbox body only (Lucas lighting)	1
14	Standard and Comp. rigid and spring	66-8348	Toolbox distance piece (Lucas lighting)	1
15	Standard and Comp. rigid and spring	21-5457	Toolbox fixing bolt (Lucas lighting)	1
16	Colonial (spring)	90-6818	Carrier complete	1
17	Colonial (spring)	27-8560	Carrier fixing screw washer (plain)	2
18	Colonial (spring)	21-6173	Carrier fixing screw	2
19	Standard and Comp. rigid and spring	90-6779	Rear number plate complete (Australia only) (Wico Pacy)	1
20	Standard (spring)	21-6173	Rear number plate fixing screw (top)	2
21	Standard (spring)	90-6782	Rear mudguard with fixed fittings	1
	Standard (spring)	90-6792	Rear mudguard with fixed fittings (dual seat)	1
22	Standard (spring)	21-6175	Rear number plate fixing screw (bottom)	1
23	Standard (spring)	15-7383	Rear number plate washer (rubber)	1
24	Standard and Comp. rigid and spring	90-6778	Rear number plate complete (Wico Pacy lighting)	1
25	Standard (spring)	21-5102	Mudguard stay fixing bolt nut (rear)	2
26	Standard (spring)	2-1462	Mudguard stay rear fixing bolt washer (spring)	2
27	Standard (spring)	90-6783	Rear mudguard stay (nearside)	1
28	Standard (spring)	90-6784	Rear mudguard stay (offside)	1
29	Standard (spring)	21-5401	Mudguard stay fixing bolt (rear)	2
30	Standard (spring)	21-5672	Mudguard and carrier stay bolt (nearside)	1
31	Standard (spring)	21-5102	Rear number plate bottom fixing screw nut	1
32	Standard (spring)	2-1462	Rear number plate bottom fixing screw washer (spring)	1
33	Standard (spring)	21-5102	Rear number plate top fixing screw nut	2
34	Standard (spring)	2-1462	Rear number plate top fixing screw washer (spring)	2
35	Standard (spring)	2-1462	Carrier fixing screw washer (spring)	2
36	Standard (spring)	21-5102	Carrier fixing screw nut	2

Bantam Standard and Competition (Rigid and Spring Frame).

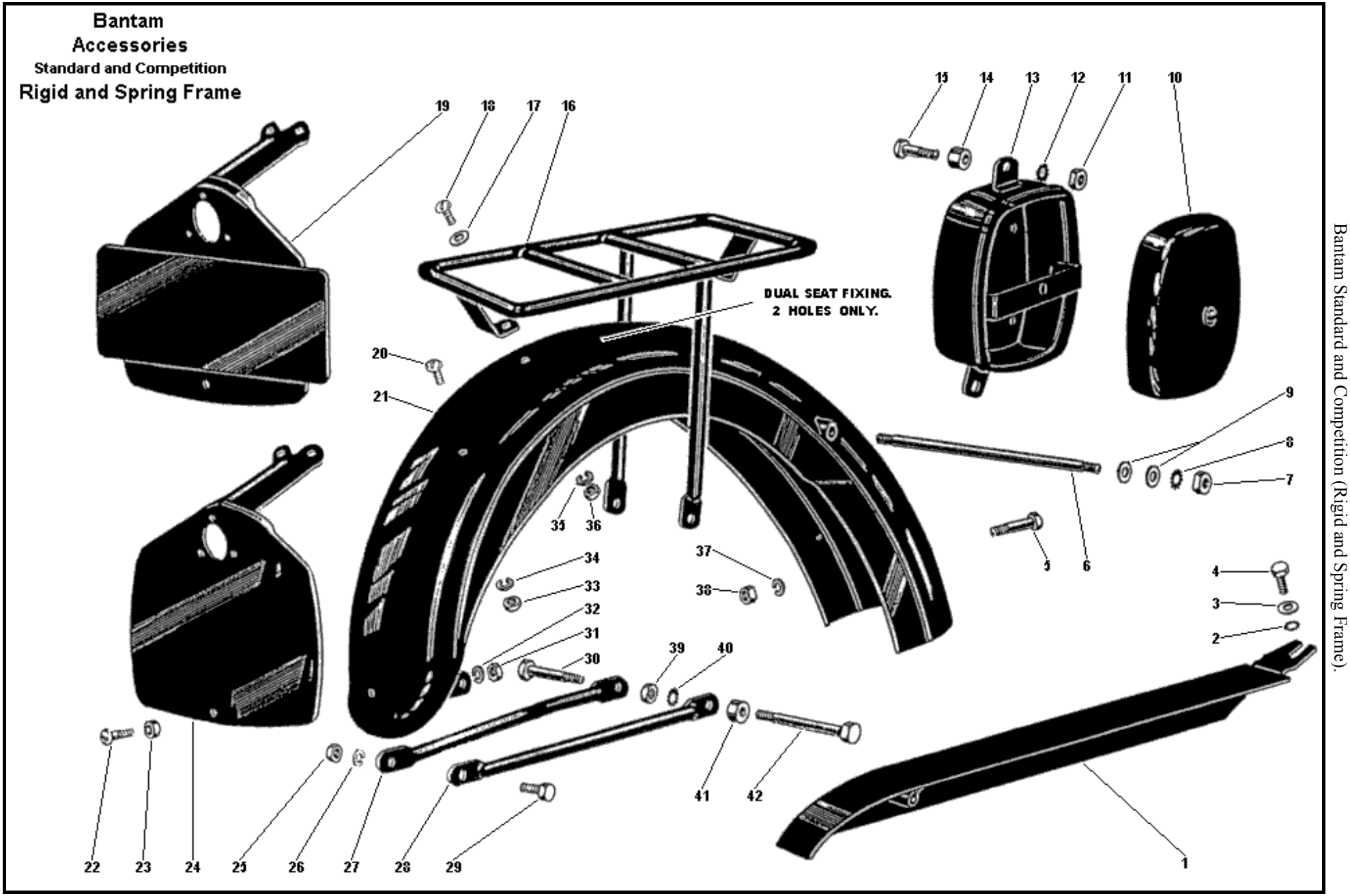

ACCESSORIES

www.ClassicCycles.org

Bantam Standard and Competition (Rigid and Spring Frame).

Plate Ref. Number.	Models.	Part No.	Description.	Number per set.
37	Standard (spring)	2-1462	Mudguard front fixing bolt washer (spring)	1
38	Standard (spring)	21-5102	Mudguard front fixing bolt nut	1
39	Standard (spring)	21-5103	Mudguard and carrier stay bolt nut	2
40	Standard (spring)	36-382	Mudguard and carrier stay bolt washer (shakeproof)	2
41	Standard (spring)	66-8347	Mudguard stay distance piece	2
42	Standard (spring)	21-5677	Mudguard and carrier stay bolt (offside)	1

Plate 11

ACCESSORIES

Bantam Standard and Competition (Rigid and Spring Frame).

Plate Ref. Number.	Models.	Part No.	Description.	Number per set.
1	Standard and Comp. rigid and spring	90-7006	Rear brake adjuster nut	1
2	Standard (rigid)	90-9102	Dual seat stay complete (nearside)	1
3	Standard (rigid)	90-9106	Dual seat mudguard bridge	1
4	Standard (rigid)	36-382	Dual seat stay bolt washer (shakeproof)	2
5	Standard (rigid)	21-5103	Dual seat stay bolt nut	2
6	Standard (rigid)	2-1462	Dual seat mudguard bridge bolt washer (spring)	2
7	Standard (rigid)	22-5102	Dual seat mudguard bridge bolt nut	2
8	Standard (rigid)	90-9104	Dual seat stay complete (offside)	1
9	Standard (rigid)	67-9087	Dual seat complete	1
10	Standard and Comp. rigid and spring	21-5103	Petrol tank rear fixing bolt nut	1
11	Standard and Comp. rigid and spring	24-8784	Petrol tank rear fixing bolt washer (spring)	1
12	Standard and Comp. rigid and spring	90-8010	Petrol tank rear fixing bolt distance tube	1
13	Standard rigid and spring	90-8014	Petrol tank centre strip complete (Colonial only)	1
14	Standard and Comp. rigid and spring	90-8006	Petrol tank filler cap and oil measure	1
15	Standard and Comp. rigid and spring	90-8003/18	Petrol tank	1
16	Standard and Comp. rigid and spring	24-8784	Petrol tank front fixing bolt washer (spring)	2
17	Standard and Comp. rigid and spring	2-923	Petrol tank front fixing bolt washer (plain)	1
18	Standard and Comp. rigid and spring	21-5452	Petrol tank front fixing bolt	2
19	Standard and Comp. rigid and spring	29-4661	Battery carrier strap bolt (Lucas Lighting)	1
20	Standard and Comp. rigid and spring	29-4662	Battery carrier strap saddle washer (Lucas Lighting)	1
21	Standard and Comp. rigid and spring	90-4612	Battery strap (Lucas Lighting)	1
22	Standard and Comp. rigid and spring	65-2352	Battery carrier swivel block (tapped) (Lucas Lighting)	1
23	Standard and Comp. rigid and spring	90-4610	Battery carrier bracket (Lucas Lighting)	1
24	Standard and Comp. rigid and spring	65-2353	Battery carrier swivel block (tapped) (Lucas Lighting)	1
25	Standard and Comp. rigid and spring	24-8504	Petrol filter washer	1
26	Standard and Comp. rigid and spring	67-8092	Petrol tap	1
27	Standard (rigid)	21-5461	Dual seat front support bracket fixing bolt	1
28	Standard and Comp. rigid and spring	90-8012	Petrol pipe complete	1
29	Standard rigid and spring	24-6040	Pillion footrest bolt nut	2
30	Standard rigid and spring	36-382	Pillion footrest bolt washer (shakeproof)	2

Bantam Standard and Competition (Rigid and Spring Frame).

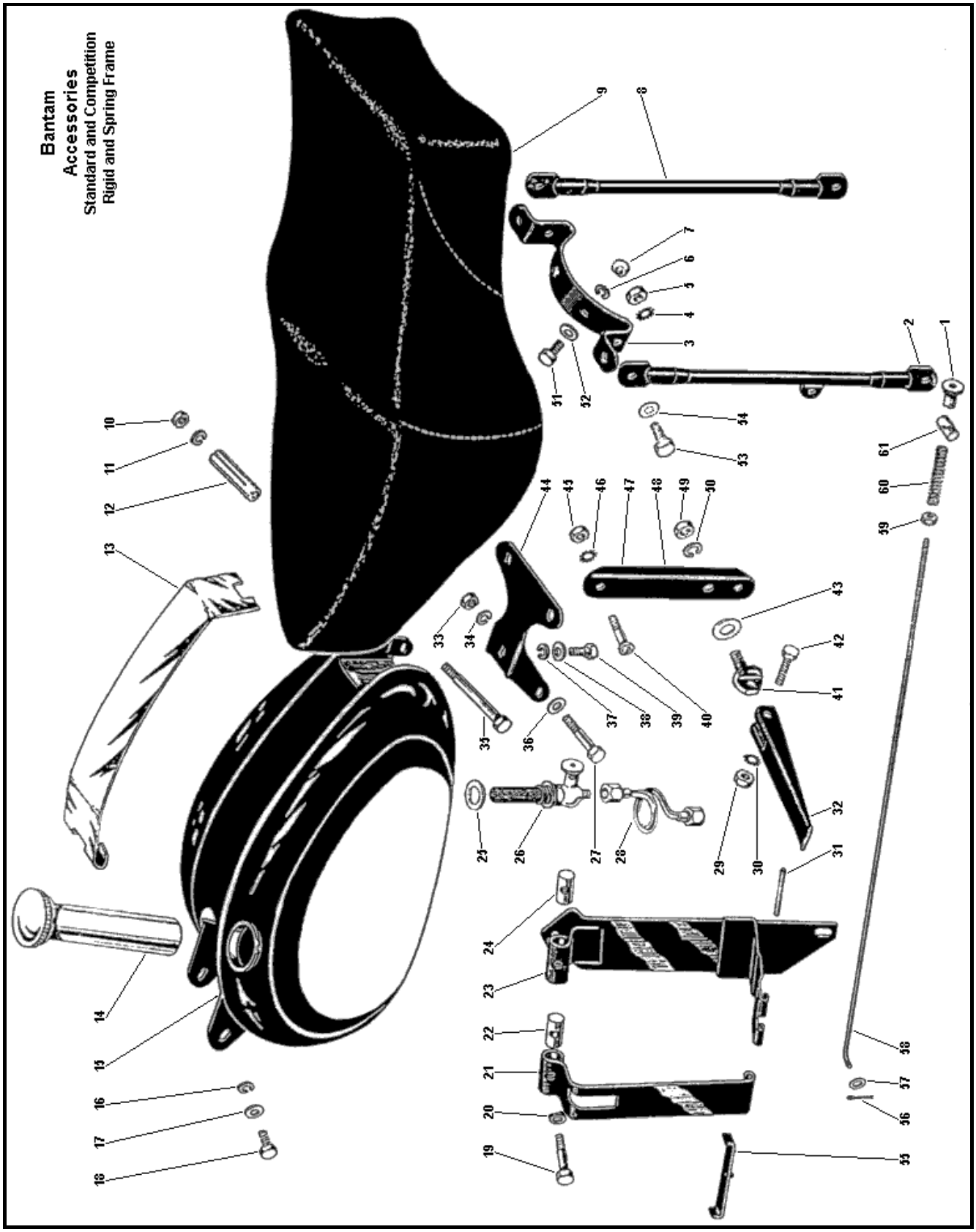

ACCESSORIES

Bantam Standard and Competition (Rigid and Spring Frame).

www.ClassicCycles.org

Plate Ref. Number.	Models.	Part No.	Description.	Number per set.
31	Standard and Comp. rigid and spring	29-4664	Battery strap hinge pin (Lucas lighting)	1
32	Standard rigid and spring	29-7561	Pillion footrest complete	2
33	Standard (rigid)	21-5103	Dual seat front support bracket fixing bolt nut	1
34	Standard (rigid)	35-33	Dual seat front support bracket fixing bolt washer (spring)	1
35	Standard and Comp. rigid and spring	21-5466	Petrol tank fixing bolt (rear)	1
36	Standard (rigid)	2-923	Dual seat front support bracket fixing bolt washer (plain)	1
37	Standard (rigid)	35-33	Dual seat fixing bolt washer (spring)	5
38	Standard (rigid)	2-923	Dual seat fixing bolt washer (plain)	5
39	Standard (rigid)	2-129	Dual seat fixing bolt	5
40	Standard rigid and spring	2-2980	Pillion footrest to frame bolt	4
41	Standard rigid and spring	65-4917	Pillion footrest anchor bolt	2
42	Standard rigid and spring	29-7564	Pillion footrest bolt	2
43	Standard rigid and spring	29-5914	Pillion footrest anchor bolt washer	2
44	Standard (rigid)	90-9107	Dual seat front support bracket	1
45	Standard rigid and spring	2-49	Pillion footrest to frame bolt nut	4
46	Standard rigid and spring	36-382	Pillion footrest to frame bolt washer (shakeproof)	4
47	Standard (rigid)	90-4835	Pillion footrest support complete	2
48	Standard (spring)	90-4831	Pillion footrest support complete	2
49	Standard rigid and spring	2-46	Pillion footrest anchor bolt nut	2
50	Standard rigid and spring	2-522	Pillion footrest anchor bolt washer (spring)	2
51	Standard (rigid)	21-5401	Dual seat mudguard bridge bolt	2
52	Standard (rigid)	27-8560	Dual seat mudguard bridge bolt washer (plain)	2
53	Standard (rigid)	21-5453	Dual seat stay bolt	2
54	Standard (rigid)	2-923	Dual seat stay bolt washer (plain)	2
55	Standard and Comp. rigid and spring	90-4613	Battery locating strip complete (Lucas lighting)	1
56	Standard and Comp. rigid and spring	35-704	Rear brake pedal split pin	1
57	Standard and Comp. rigid and spring	2-6537	Rear brake rod washer	1
58	Standard and Comp. rigid and spring	90-7005	Rear brake rod	1
59	Standard and Comp. rigid and spring	21-5102	Rear brake rod nut	1
60	Standard and Comp. rigid and spring	15-1312	Rear brake rod spring	1
61	Standard and Comp. rigid and spring	65-6274	Rear brake lever swivel pin	1

Plate 12

TOOLS and SUNDRIES

Bantam

Plate Ref. Number.	Models.	Part No.	Description.	Number per set.
1	Bantam	90-9024	Rubber cable clip (small)	3
2	Bantam	66-9049	Rubber cable clip (large)	7
3	Bantam	28-4265	Grease gun	1
4	Bantam	90-9011	Bulb horn unit with locknut	1
5	Bantam	42-9026	Inflator	1
6	Bantam	90-9021	Speedometer cable	1

TOOLS and SUNDRIES

Bantam

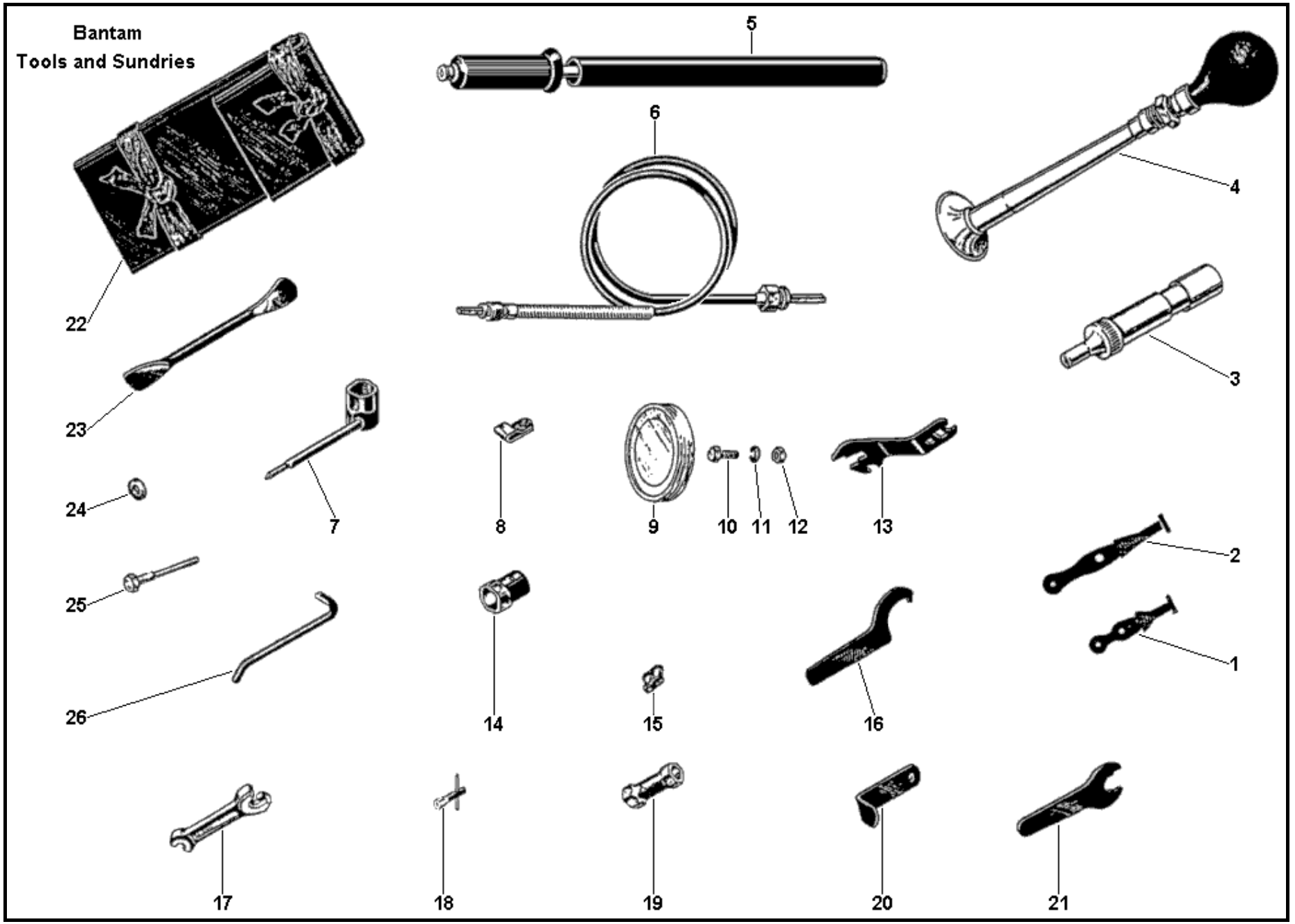

www.ClassicCycles.org

TOOLS and SUNDRIES

Bantam

www.ClassicCycles.org

Plate Ref. Number.	Models.	Part No.	Description.	Number per set.
7	Bantam	66-9132	Sparking plug spanner	1
8	Bantam	27-8953	Lighting and clutch cable clip	1
9	Bantam	29-9221	Licence holder	1
10	Bantam	21-5401	Licence holder bolt	1
11	Bantam	2-1462	Licence holder bolt nut washer	1
12	Bantam	21-5102	Licence holder bolt nut	1
13	Bantam	29-9254	Combination spanner	1
14	Bantam	90-9038	Rear hub spindle nut spanner	1
15	Bantam	90-9048	Rear chain connecting link	1
16	Bantam	90-9016	Exhaust pipe union nut spanner	1
17	Bantam	1-3051	Double ended spanner	1
18	Bantam	90-9022	Carburetter spanner	1
19	Bantam	65-9115	Box spanner	1
20	Bantam	90-9069	Speedometer cable clip	1
21	Bantam	15-8945	Gearbox filler plug spanner	1
22	Bantam	90-9013	Toolbag only	1
23	Bantam	90-9018	Tyre lever	1
24	Bantam	90-9057	Tail lamp wire rubber grommet	3
25	Bantam	90-297	Extractor (Lucas alternator)	1
26	Bantam	29-9253	Tommy bar	1

Plate 13

LEGSHIELDS and BUMPER BARS

Bantam

Plate Ref. Number.	Models.	Part No.	Description.	Number per set.
1	Bantam	90-4812	Footrest rubber	2
2	Bantam	90-3021	Bumper bar legshield clip (required when bumper bars are fitted)	4
3	Bantam	90-7196	Bumper bar front down tube clip	1
4	Bantam	21-5102	Bumper bar front down tube clip nut	2
5	Bantam	29-541	Bumper bar front down tube clip nut washer	2
6	Bantam	21-6175	Bumper bar front down tube clip screw	2
7	Bantam	90-7204	Bumper bar	1
8	Bantam	2-525	Legshield bottom bracket bolt washer	2
9	Bantam	29-541	Legshield bottom bracket bolt washer	2
10	Bantam	21-5102	Legshield bottom bracket bolt nut	2
11	Bantam	90-7195	Legshield top support tube	1
12	Bantam	90-7196	Top support tube clip	1
13	Bantam	21-5102	Top support tube clip nut	2
14	Bantam	29-541	Top support tube clip nut washer	2
15	Bantam	21-5401	Top support tube clip bolt	2
16	Bantam	21-5102	Top support tube screw nut	4
17	Bantam	29-541	Top support tube screw washer	4
18	Bantam	2-525	Top support tube screw washer	4
19	Bantam	21-6173	Top support tube screw	4
20	Bantam	21-5102	Bottom support screw nut	2
21	Bantam	29-541	Bottom support screw washer	2
22	Bantam	2-525	Bottom support screw washer	2
23	Bantam	21-6173	Bottom support screw	2
24	Bantam	90-7194	Legshield only (right-hand)	1
25	Bantam	90-7194	Legshield only (left-hand)	1
26	Bantam	90-7198	Bottom support bracket (offside)	1
27	Bantam	21-5671	Support bracket engine fixing bolt	1
28	Bantam	90-7199	Bottom support bracket (nearside)	1
29	Bantam	36-382	Support bracket engine fixing bolt washer	1
30	Bantam	21-5103	Support bracket engine fixing bolt nut	1
31	Bantam	90-7197	Legshield bottom bracket	2
32	Bantam	21-5621	Bottom bracket engine fixing bolt	1
33	Bantam	29-541	Bottom bracket engine fixing bolt washer	1
34	Bantam	21-5102	Bottom bracket engine fixing bolt nut	1
35	Bantam	36-379	Bottom bracket bolt	2

Bantam
Legshields and Bumper Bars

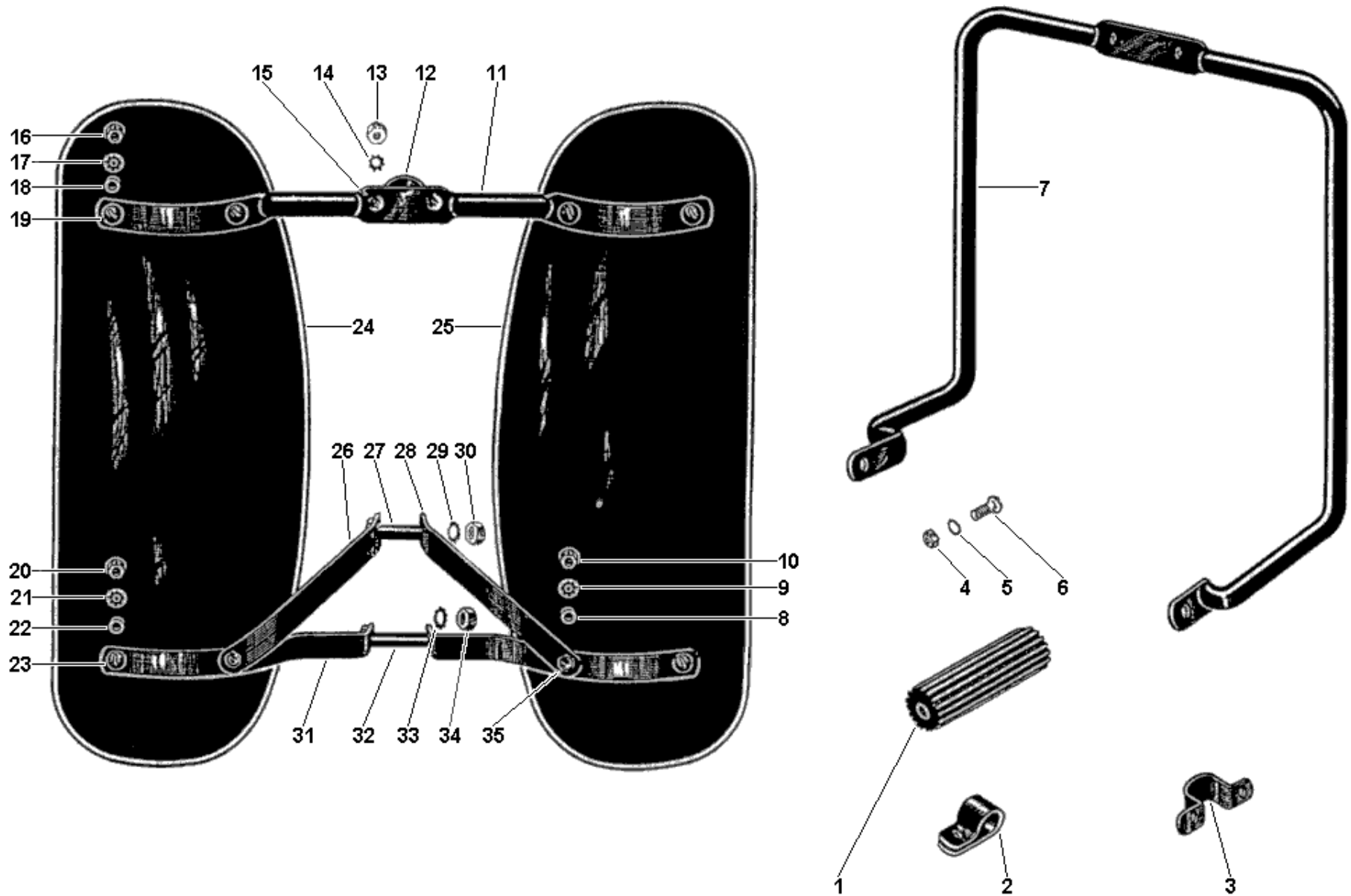

ELECTRICAL EQUIPMENT

Bantam

www.ClassicCycles.org

Plate Ref. Number.	Models.	Part No.	Description.	Number per set.
1	Bantam	056626	Headlamp (green) (Lucas)	1
	Bantam	056919	Headlamp (black) (Lucas)	1
2	Bantam	21-5452	Switch plate and frame clip bolt (rigid frame)	1
	Bantam	2-2980	Stop light switch plate bolt (spring frame)	1
3	Bantam	90-3021	Switch plate frame clip	1
4	Bantam	29-9342	Stop lamp switch plate	1
5	Bantam	31281	Stop and tail lamp switch (Lucas)	1
6	Bantam	36-382	Stop lamp switch plate bolt washer	1
7	Bantam	2-49	Switch plate bolt nut (spring frame)	1
	Bantam	21-5103	Switch plate and frame clip bolt nut (rigid frame)	1
8	Bantam	21-5402	Ignition coil bolt	1
9	Bantam	45033	Ignition coil (Lucas)	1
10	Bantam	29-541	Ignition coil bolt washer	1
11	Bantam	21-5102	Ignition coil bolt nut	1
12	Bantam	2-47	Stop light switch screw nut	2
13	Bantam	29-3319	Stop light switch screw washer	2
14	Bantam	2-1309	Stop light switch screw	2
15	Bantam	65-9231	Stop light operating spring	1
16	Bantam	65-5912	Brake rod clip screw	1
17	Bantam	65-9228	Brake rod clip	1
18	Bantam	29-3319	Brake rod clip screw washer	1
19	Bantam	2-1588	Brake rod clip screw nut	1
20	Bantam	HF150	Electric horn (Lucas)	1
21	Bantam	21-6176	Rectifier bolt	4
22	Bantam	66-8348	Rectifier bolt distance piece	4
23	Bantam	29-541	Rectifier bolt nut washer	4
24	Bantam	21-5102	Rectifier bolt nut	4
25	Bantam	47078	Rectifier (Lucas)	1
26	Bantam	93	Tail lamp (Wico Pacy)	1
27	Bantam	G58	Headlamp (green) (Wico Pacy)	1
	Bantam	G58	Headlamp (black) (Wico Pacy)	1
28	Bantam	53269A	Tail lamp	1
29	Bantam	076020	Horn push with cable	1
30	Bantam	S411/L	Speedometer (M.P.H.) (Smiths)	1
	Bantam	S411/K	Speedometer (K.P.H.) (Smiths)	1
31	Bantam	90-9021	Speedometer cable	1

ELECTRICAL EQUIPMENT

Bantam

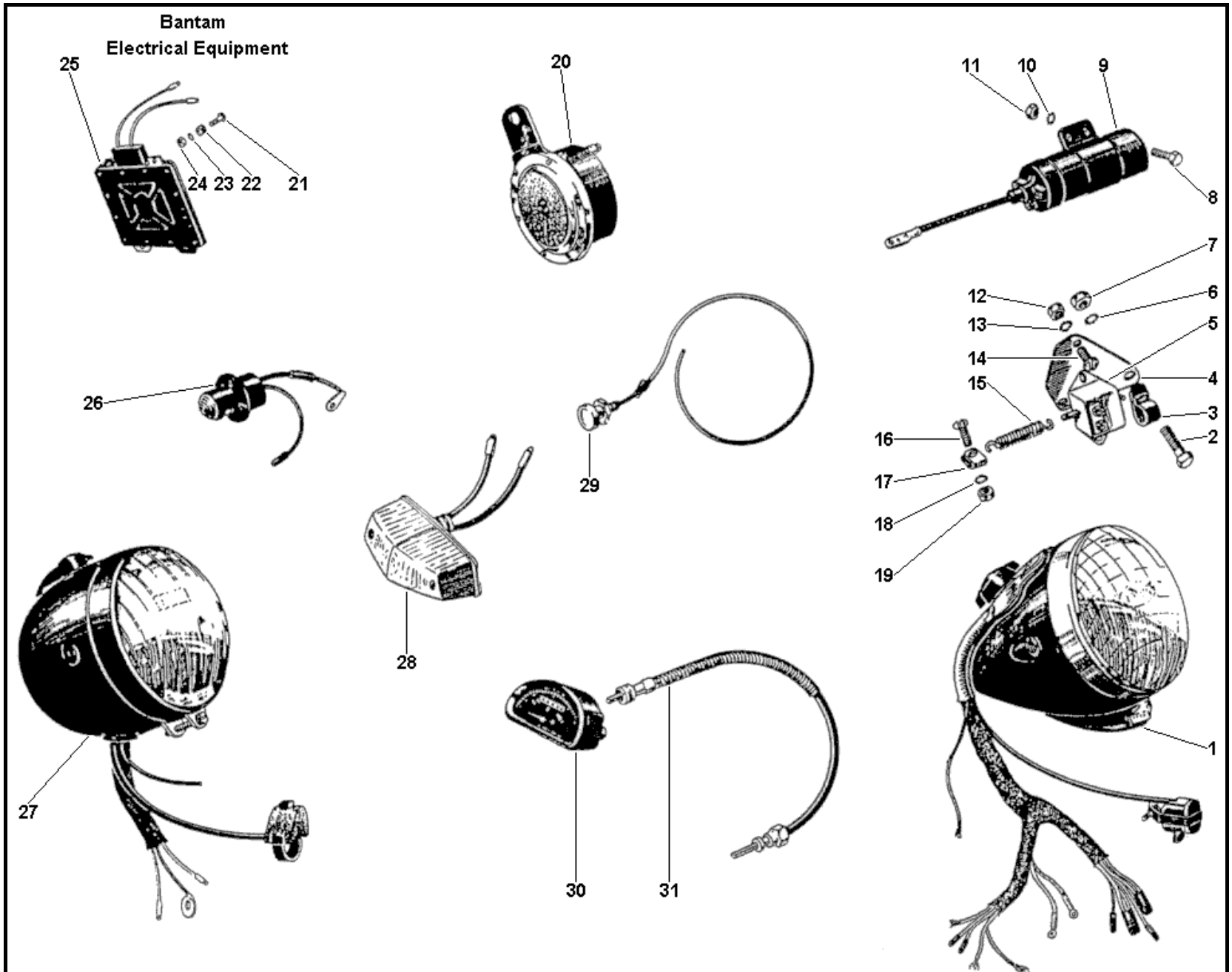

www.ClassicCycles.org